ZEON® XC
Winch Service Manual

GENERAL SAFETY PRECAUTIONS

Your safety, and the safety of others, is very important. To help you make informed decisions about safety, we have provided installation and operating instructions and other information on labels and in this guide. This information alerts you to potential hazards that could hurt you or others. It is not possible to warn you about all potential hazards associated with this product, you must use your own good judgment.

CARELESS INSTALLATION AND OPERATION CAN RESULT IN SERIOUS INJURY OR EQUIPMENT DAMAGE. READ AND UNDERSTAND ALL SAFETY PRECAUTIONS AND OPERATING INSTRUCTIONS BEFORE INSTALLING AND OPERATING THIS PRODUCT.

This guide identifies potential hazards and has important safety messages that help you and others avoid personal injury or death. WARNING and CAUTION are signal words that identify the level of hazard. These signal words mean:

⚠WARNING signals a hazard that could cause serious injury or death, if you do not follow recommendations. ⚠CAUTION signals a hazard that may cause minor to moderate injury, if you do not follow recommendations.

This guide uses *NOTICE* to call attention to important mechanical information and NOTE to emphasize general information worthy of special attention.

⚠ WARNING

IMPACT AND MOVING PARTS ENTANGLEMENT HAZARD

Failure to observe these instructions could lead to severe injury or death

- **Always** take time to fully read the Instructions and/or Operations Guide, and/or Basic Guide to Winching Techniques, in order to understand your winch and its operations.
- **Always** use extreme caution when drilling on any vehicle. Make sure that all fuel lines, brake lines, electrical wires, and other objects are not punctured or damaged when/if drilling on the vehicle. Thoroughly inspect the area to be drilled (on both sides of material) prior to drilling, and relocate any objects that may be damaged. Failure to inspect the area to be drilled may result in vehicle damage, electrical shock, fire or personal injury.
- **Always** wear safety glasses when installing this kit. A drilling operation will cause flying metal chips. Flying chips can cause eye injury.
- **Always** remove jewelry and wear eye protection.
- **Never** lean over battery while making connections.
- **Never** route electrical cables:
  - Across any sharp edges.
  - Through or near moving parts.
  - Near parts that become hot.
- **Always** insulate and protect all exposed wiring and electrical terminals.
- **Always** install terminal boots as directed in installation instructions.
- **Always** use appropriate and adequate care in lifting components into place.
- **Always** insure components will remain secure during installation and operation.
- **Always** tighten all nuts and bolts securely, per the installation instructions.
- **Always** replace all worn or damaged parts before operating.
- **Never** operate this WARN product with damaged or missing parts.

Read installation and operating instructions thoroughly.

⚠ CAUTION

MOVING PARTS ENTANGLEMENT HAZARD

Failure to observe these instructions could lead to minor or moderate injury

- **Always** use proper tools when making repairs.
- **Always** utilize a qualified WARN service technician when specialized tools are required.
- **Always** disconnect all wires from the positive battery terminal or disconnect hydraulic hoses from the winch motor before beginning any work on the winch.

Read installation and operating instructions thoroughly.

TABLE OF CONTENTS

SECTION 1 - GETTING STARTED

Section	Description	Page
1.1	Identification	3
1.2	Definitions	4-5
1.3	Winch Operation	5

SECTION 2 - DISASSEMBLY & ASSEMBLY

Section	Description	Page
2.1	Suggested Tools	5
2.2	Winch Disassembly	6-8
2.3	Winch Reassembly	9-11
2.4	Motor Disassembly	12-15
2.5	Motor Reassembly	16-19
2.6	Geartrain Dissembly	20-24
2.7	Geartrain Reassembly	25-33
2.8	Control Pack Disassembly	34-37
2.9	Control Pack Reassembly	38-40
2.10	Brake Disassembly	41-42
2.11	Brake Reassembly	43-44
2.12	Geartrain Clocking	45-46

SECTION 3 - TROUBLESHOOTING

Section	Description	Page
3.1	Power In/Out	47
3.2	Brake	47
3.3	Clutch	47-48
3.4	Noise	48

SECTION 4 - MAINTENANCE

Section	Description	Page
4.1	General Winch Maintenance	49
4.2	Winch Rope Maintenance	50

SECTION 5 - SERVICE KITS AND DIAGRAMS

Section	Description	Page
5.1	Replacement Parts List	51-52
5.2	Replacement Parts Diagram	53

BEFORE YOU BEGIN

This manual is intended for use by a WARN authorized service technician. It is important to make repairs with the proper tools and equipment.

WARNING Read all instructions and safety information provided. Failure to do so, may cause the winch to fail, leading to personal injury. For full winch operation and techniques, as well as other product specific literature, visit www.warn.com.

This manual covers models:

- ZEON® XC 10, 12, 14

SECTION 1 - GETTING STARTED

1.1 Identification

To ensure proper winch repair, it is necessary to correctly identify the model and part number of your winch. This makes ordering replacement parts easier and helps you obtain the necessary information from WARN customer service at 1-800-543-9276.

NOTE: For a part description, item number and quantity, refer to the Specification Sheet for your specific winch model at www.warn.com.

Winch identification:

The product label is typically located on control pack. This label gives winch capacity and model.

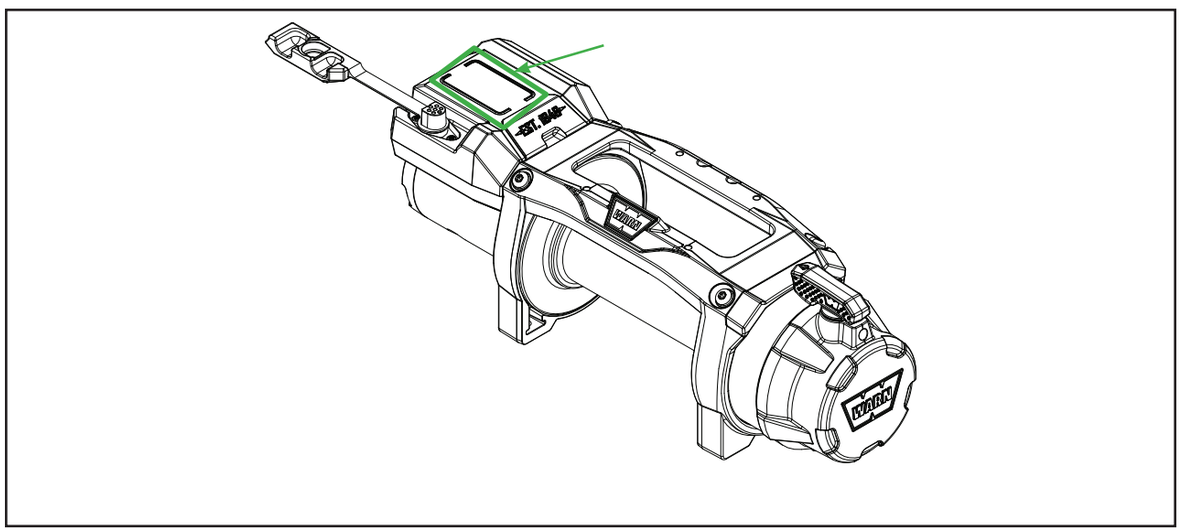

Winch serial number:

The serial number is stamped on the drum support.

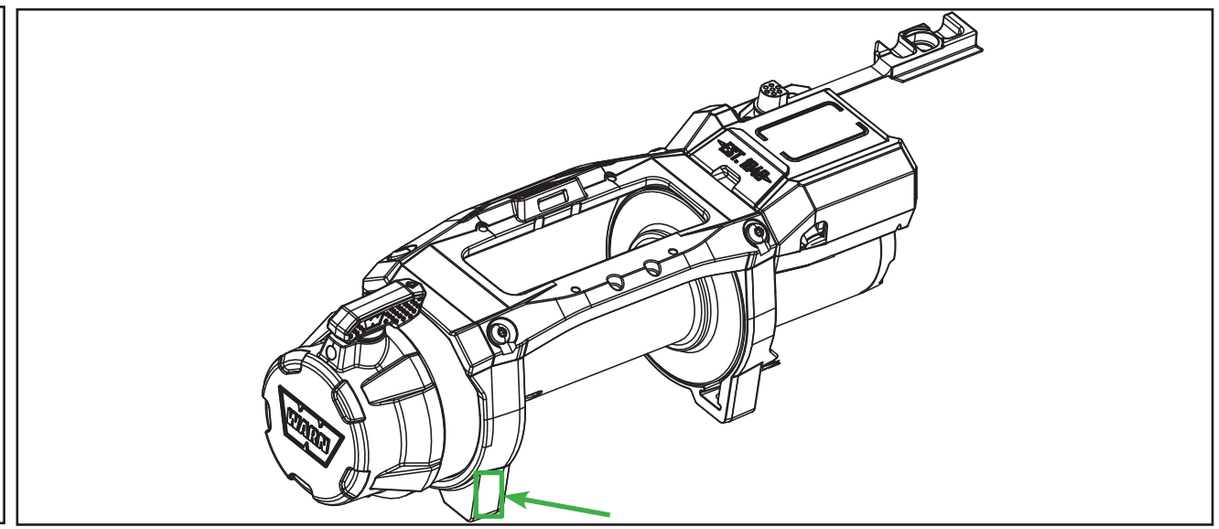

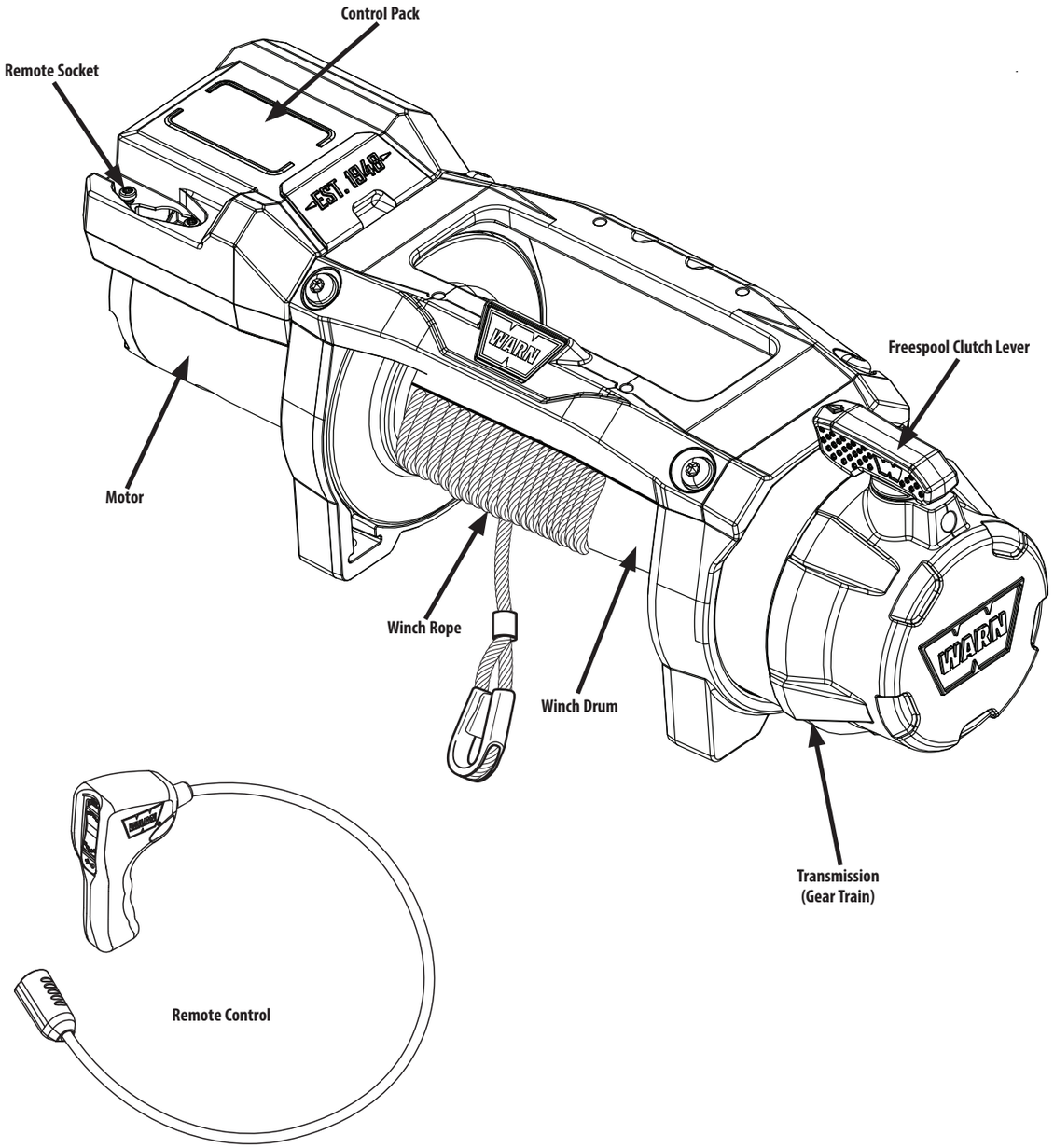

1.2 Definitions

1.2.1 Definitions

Operation and service of a Warn planetary winch can be explained easier by defining a few major structural components. Refer to Figure 1.2 for the following definitions:

MOTOR: The electric winch is driven by a high speed, low torque electric motor. A 12-volt DC vehicle battery generally powers the electric motor.

REMOTE SOCKET: The remote socket is where the operator plugs in the wired remote control in order to control the winch.

WINCH ROPE: The winch rope's diameter and length are determined by the winch's load capacity and design. Wrapped around the winch drum and fed through the fairlead, the winch rope is looped at the end to accept the hook's clevis pin.

Synthetic winch rope is constructed of a unique ultra high molecular weight polyethylene material and offers tremendous tensile strength. It is coated with a high temperature urethane and equipped with a temperature resistant sleeve on the first layer for added protection. The synthetic rope's high flexibility and low weight make it much easier to handle out in the field.

WINCH DRUM: The winch drum is the cylinder onto which the winch rope feeds. The drum is driven by the motor and drive train. Its direction can be changed using the remote control.

DRUM SUPPORTS: Drum supports are the structural components of the winch that mount the winch to the vehicle. The drum rotates while being held by the drum supports and both the motor and gear train are attached to a drum support.

GEAR TRAIN: Warn electric planetary winches consist of a gear train made up of three planetary gear stages. The purpose of the gear train is to multiply motor torque and to reduce motor speed transmitted to the drum. Warn gear trains are enclosed in a housing and are lubricated with grease.

CLUTCH LEVER: The clutch lever allows the operator to manually disengage and engage the winch drum from the geartrain. Disengaging the clutch enables the drum to rotate freely (known as "freespooling"). Engaging the clutch "locks" the winch drum back onto the gear train.

CONTROL PACK: Using electrical power from the vehicle's battery, the control pack's contactor switches power to the motor, enabling the operator to change the direction of the winch drum rotation.

BRAKE: All ZEON® XC winches are equipped with a directional sensitive automatic brake. The brake requires that the winch rope be wound onto the drum in the correct direction to operate properly. A Drum rotation label is located on the motor end drum support to help identify proper rotation. When the winch rope is reeled in, the brake is not activated. When reeling out under load, however, the brake slows the winch drum to an acceptable speed and holds the load when the winch is shut off. The brake is located inside the winch drum and dissipates heat through the drum and winch rope.

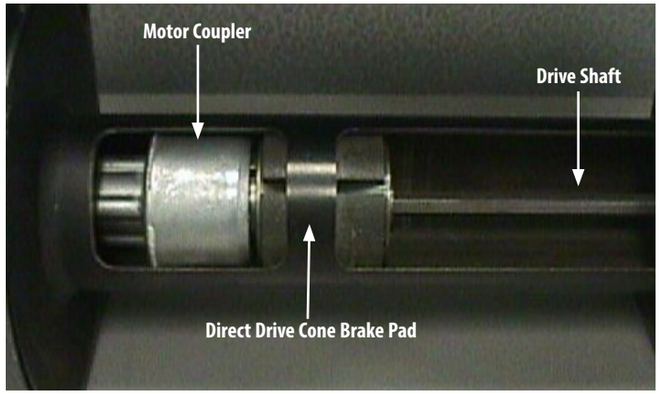

1.3 Winch Operation

A Warn winch is a compact device used to pull heavy loads over short distances. The vehicle battery and charging system generates the power for pulling the load.

Power feeds from the battery power source into the winch control pack. At the push of a remote control switch the power flows to the winch motor.

The winch motor turns the electrical energy into mechanical energy. The motor shaft turns the motor coupler, which, in turn, drives the brake.

On power-in operation, the brake simply rotates and drives the planetary gears, starting with the gear carrier stage farthest from the winch drum (the first stage carrier.) The first stage carrier, in turn, drives the second stage carrier, which then drives the third stage carrier. The third stage directly drives the drum. Since the winch rope is connected to the drum, the rope winds around the drum, causing the load to be drawn in.

On power-out operation, the motor is reversed and the winch drum is rotated in the opposite direction. All winch components operate in the same manner as during power in except the brake. During power-out, the load tries to "over speed" the motor (make the motor turn faster than it would under its own power.) When the brake detects this over speed it engages just enough to make the load and motor run at the same speed and slow the load. When the remote control switch is released, the brake engages and completely stops the load.

SECTION 2 - DISASSEMBLY AND ASSEMBLY

NOTE: This service manual covers service steps for ZEON® XC Winches. Pay particular attention to the steps as some may or may not apply to your specific winch.

2.1 Suggested Tools

The following tools are suggested for these procedures:

- 1 - 5/32" Hex Key Wrench
- 1 - ¼" Hex Key Wrench
- 1 - 13mm, 1 – ½ ', 3/8 ' Box or Open End Wrenches
- 1 - Flat Head Screwdriver
- 1 - Pliers, including Long Nose Needle
- 1 - Torque Wrench
- Assortment of Torx Bits

2.2 Winch Disassembly

1. Remove tie plate and bus bar cover bolts.

Head: T47
M8 x 1.25 x 25mm
Torque: 15-17Nm
(133-150inlb)

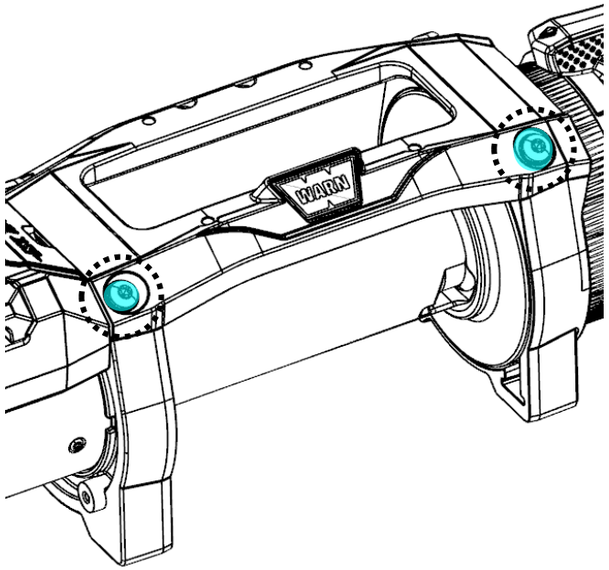

2. Remove tie plate and ground cable bolts.

Head: T47
M8 x 1.25 x 25mm
Torque: 15-17Nm
(133-150inlb)

Head: 13mm Hex M8 x 1.25 x 14mm
Torque: 10.6-13Nm
(94-115inlb)

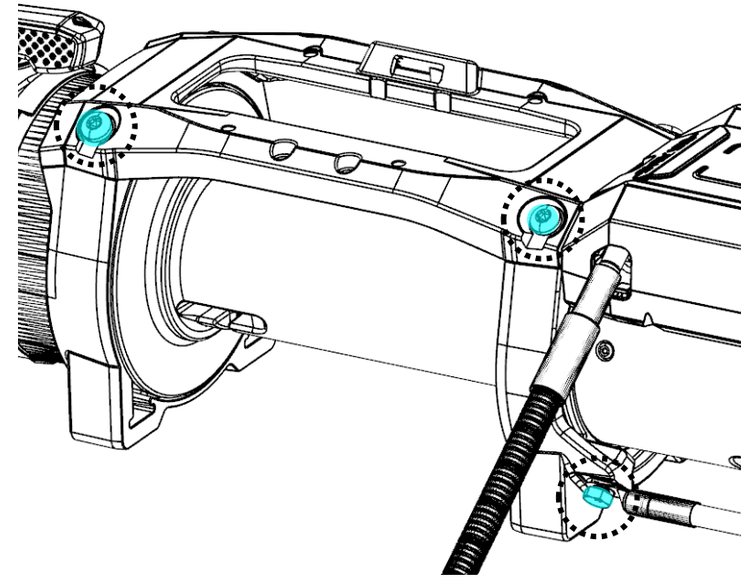

3. Separate tie plate, geartrain and motor assemblies.

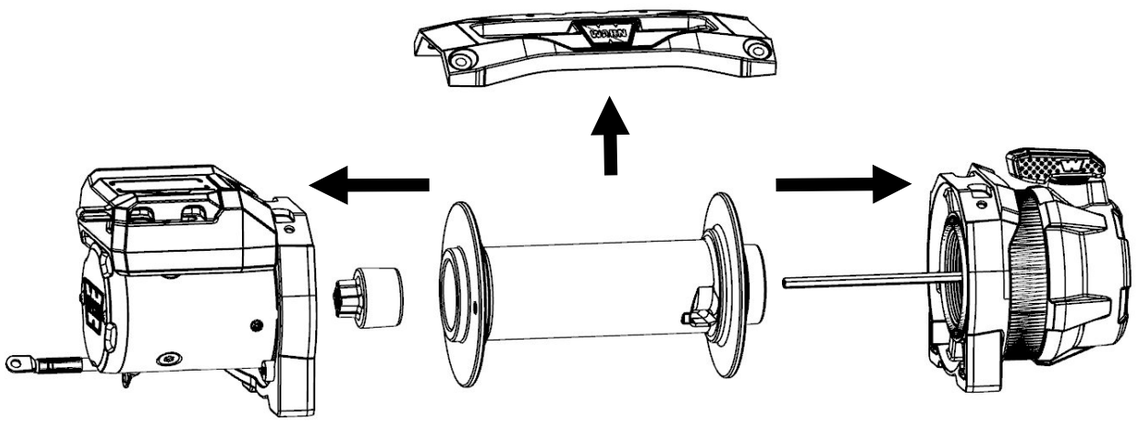

4. Remove bus bar dust cover

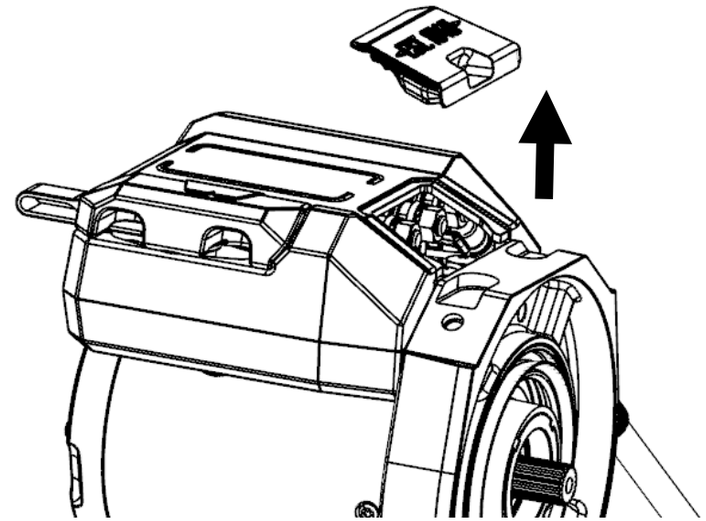

5. Remove motor terminal bolts

Head: 13mm Hex M8 x 1.25 x 14mm
Torque: 10.6-13Nm (94-115inlb)

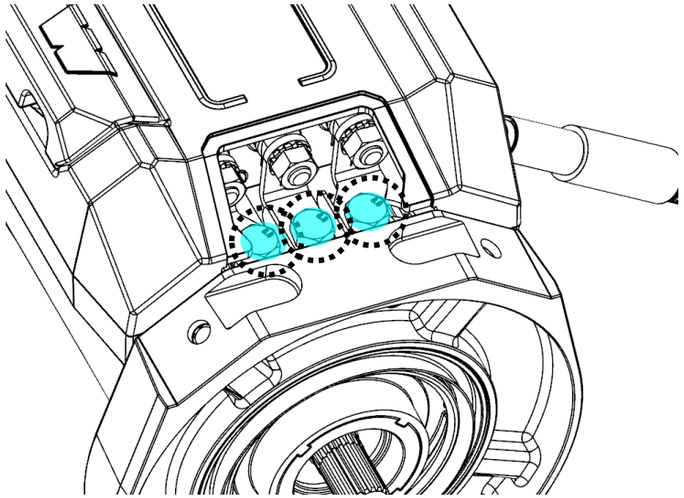

6. Remove control pack mounting bolts

Head: T30
M6 x 1.0 x 16mm
Torque: 3-5Nm (27-44inlb)

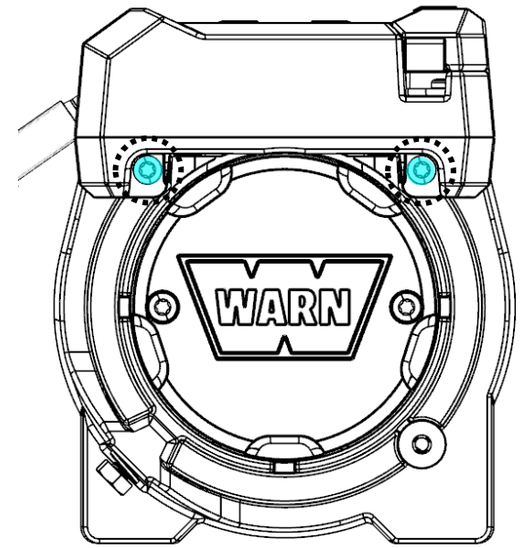

7. Remove control pack and busbar separator

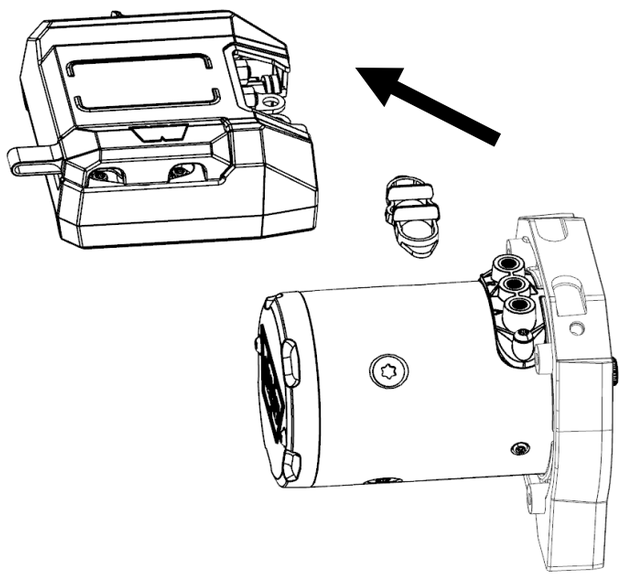

2.3 Winch Reassembly

1. Install motor assembly, geartrain assembly, and tie plate.

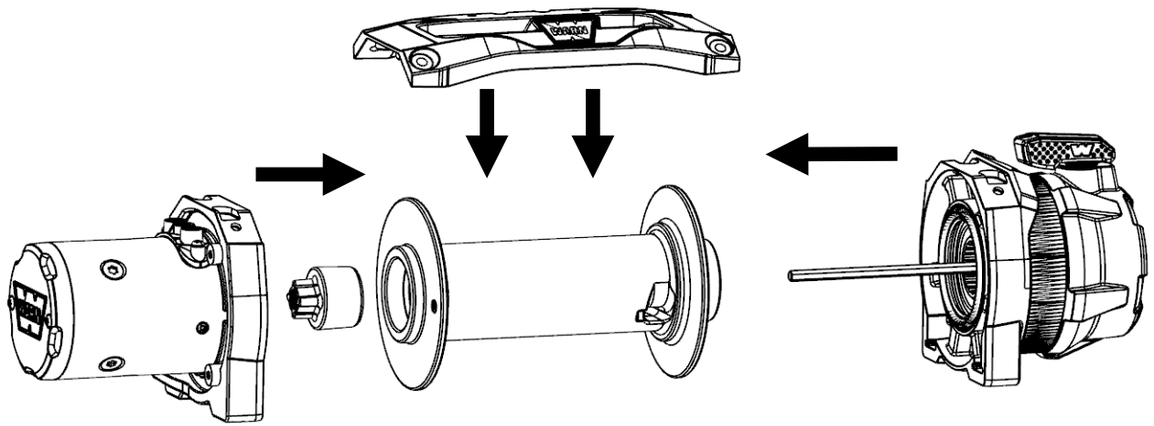

2. Install tie plate bolts.

Head: T47
M8 x 1.25 x 25mm
Torque: 15-17Nm
(133-150inlb)

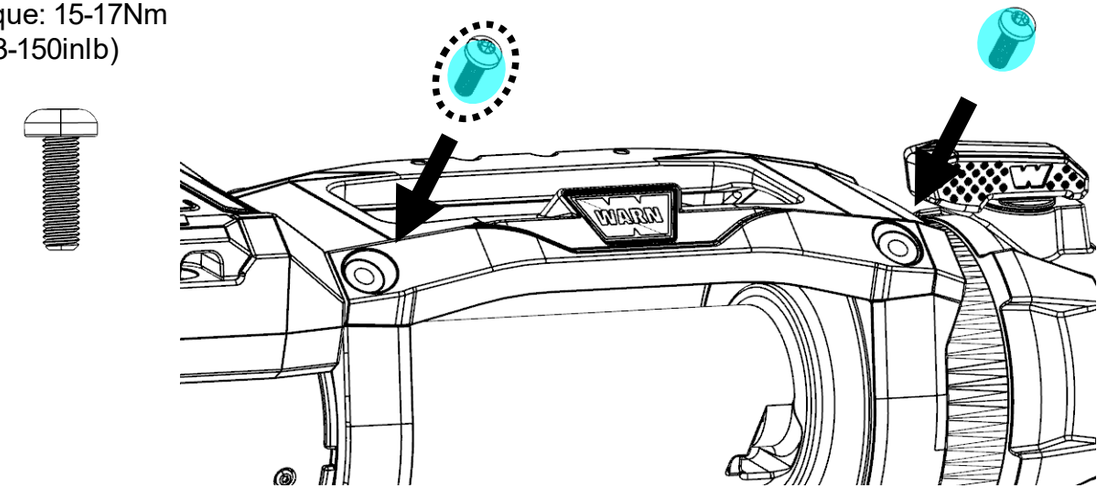

3. Install tie plate bolts and ground cable bolt

Head: T47
M8 x 1.25 x 25mm
Torque: 15-17Nm
(133-150inlb)

Head: 13mm Hex
M8 x 1.25 x 14mm
Torque: 10.6-13Nm
(94-115inlb)

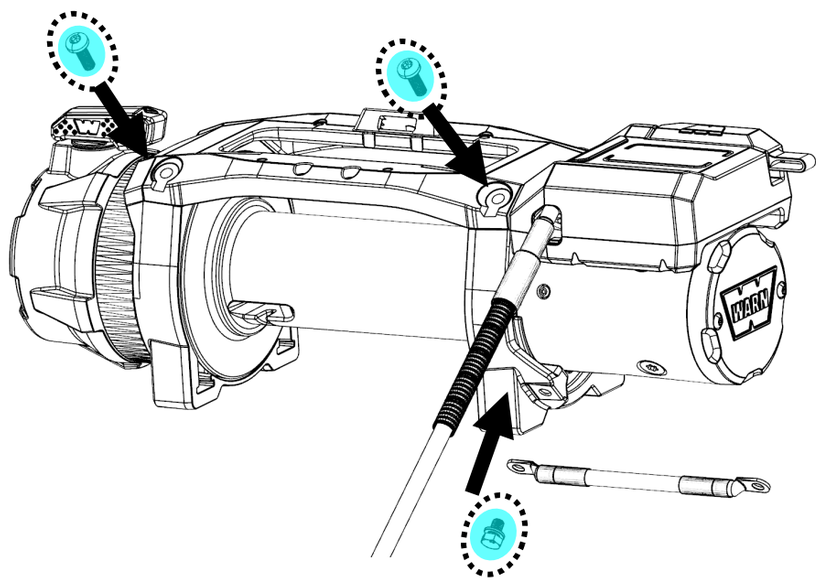

4. Install bus bar separator and control pack

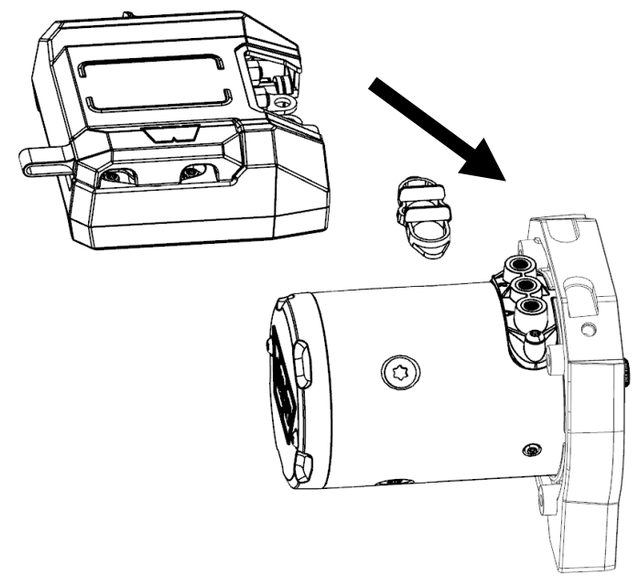

5. Install control pack mounting bolts

Head: T30
M6 x 1.0 x 16mm
Torque: 3-5Nm
(27-44inlb)

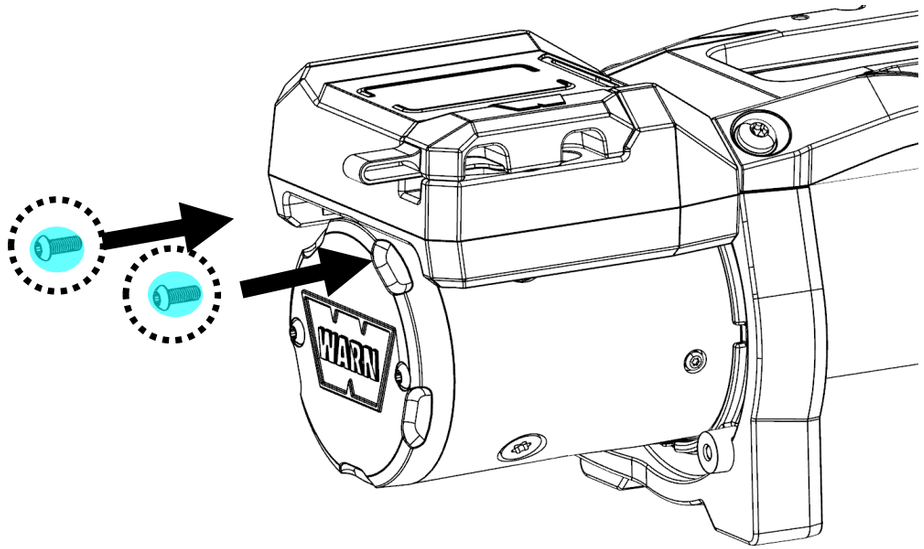

6. Install motor terminal bolts

Head: 13mm Hex M8
x 1.25 x 14mm
Torque: 10.6-13Nm
(94-115inlb)

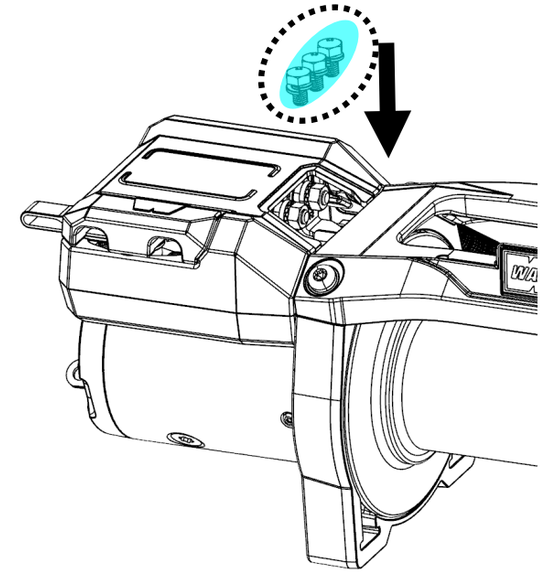

7. Install bus bar dust cover

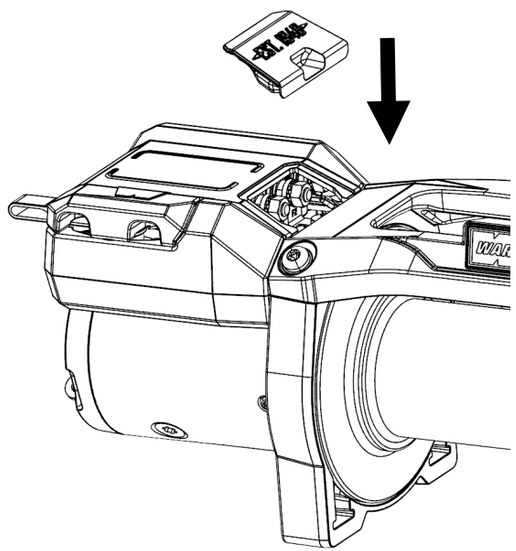

2.4 Motor Disassembly

1. Do **NOT** hold or place motor with shaft UP, the motor may disassemble.

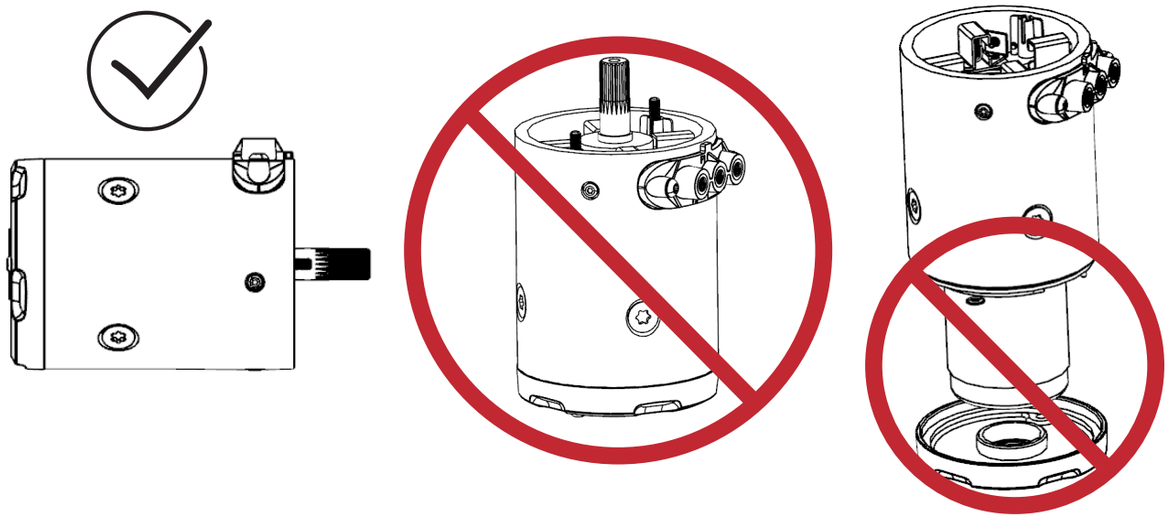

2. Remove motor drum support assembly (Section 2.1, steps 1-7).

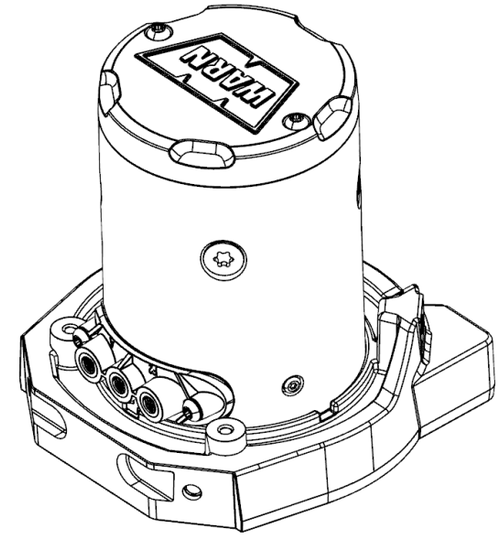

3. Remove motor bolts.

Head: T30
M6 x 1mm x 160mm
Torque: 10.6-13Nm
(94-115inlb)

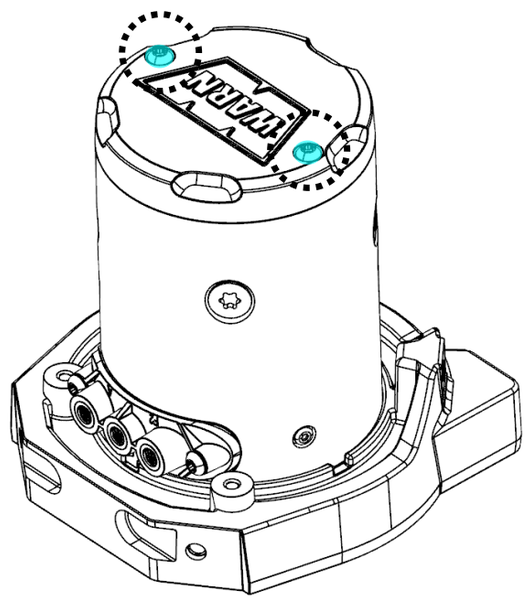

4. Remove motor from drum support.

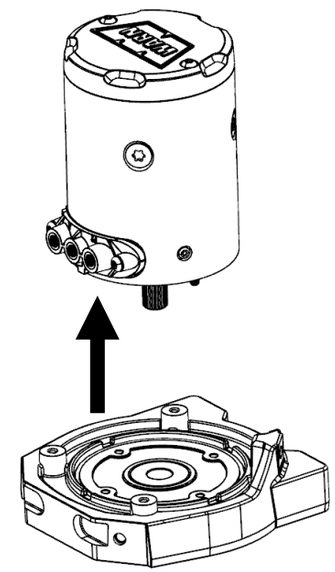

5. Remove motor from drum support.

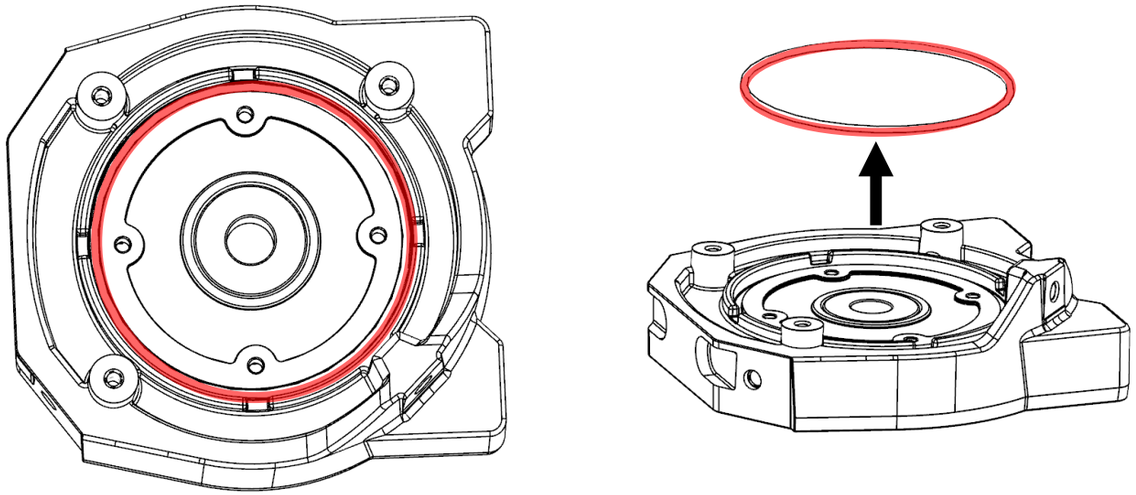

6. Remove motor from drum support.

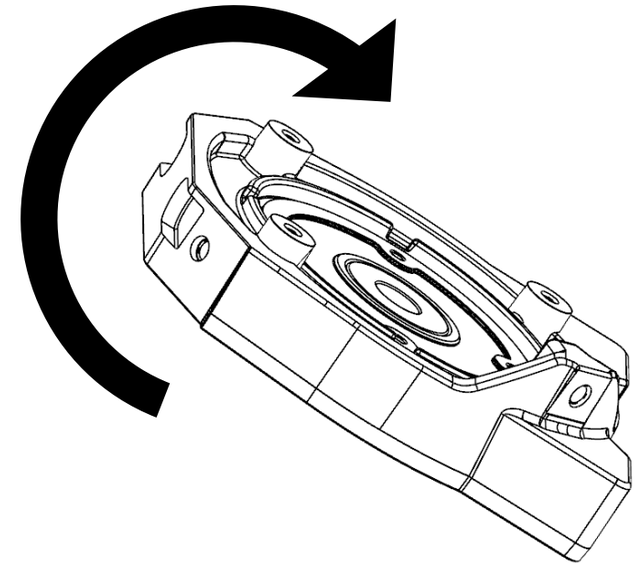

7. Remove motor from drum support.

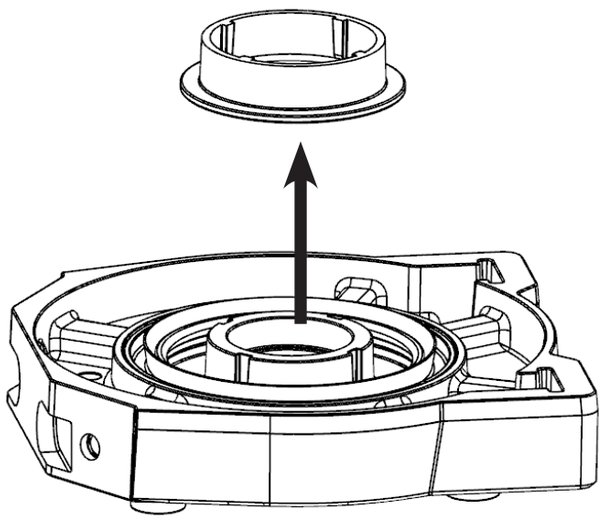

Remove motor from drum support.

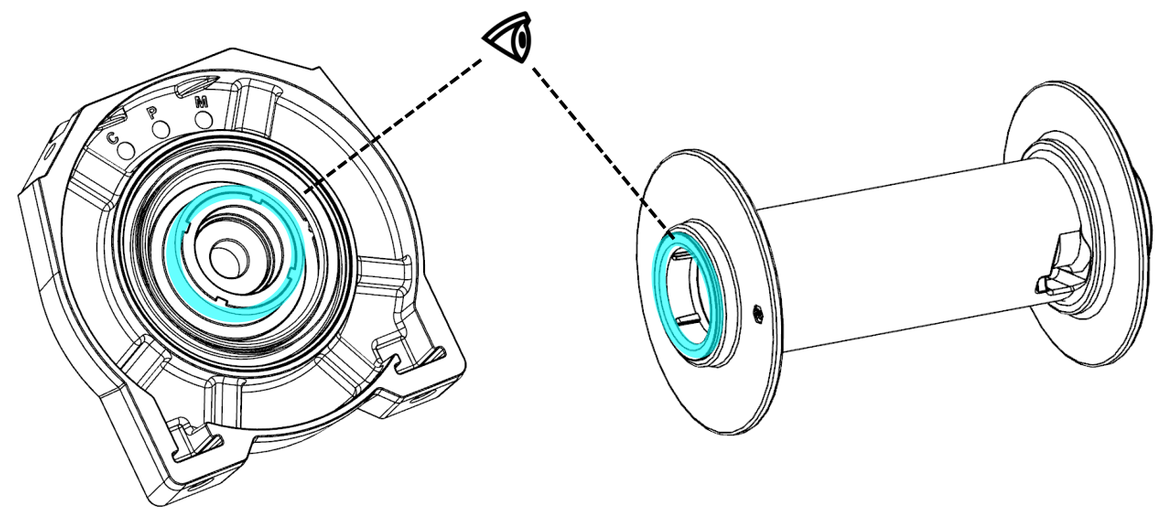

8. Remove motor from drum support.

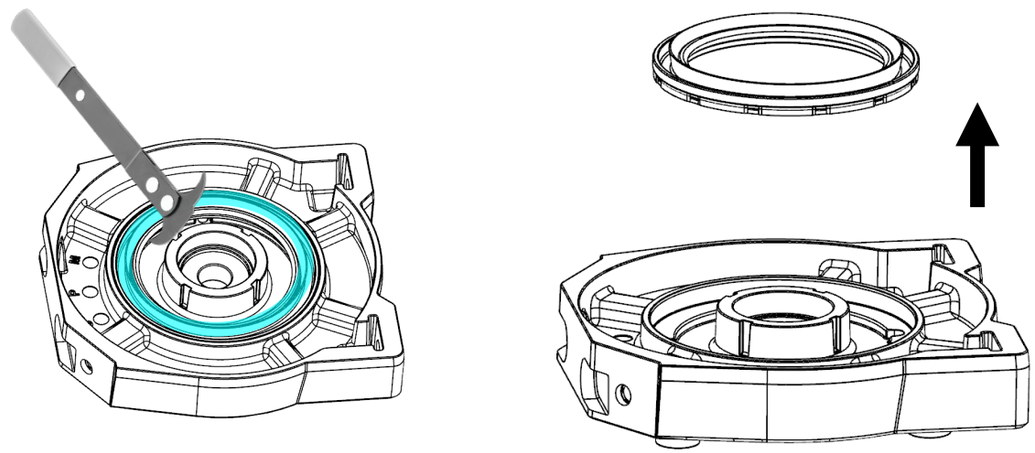

9. Remove motor from drum support.

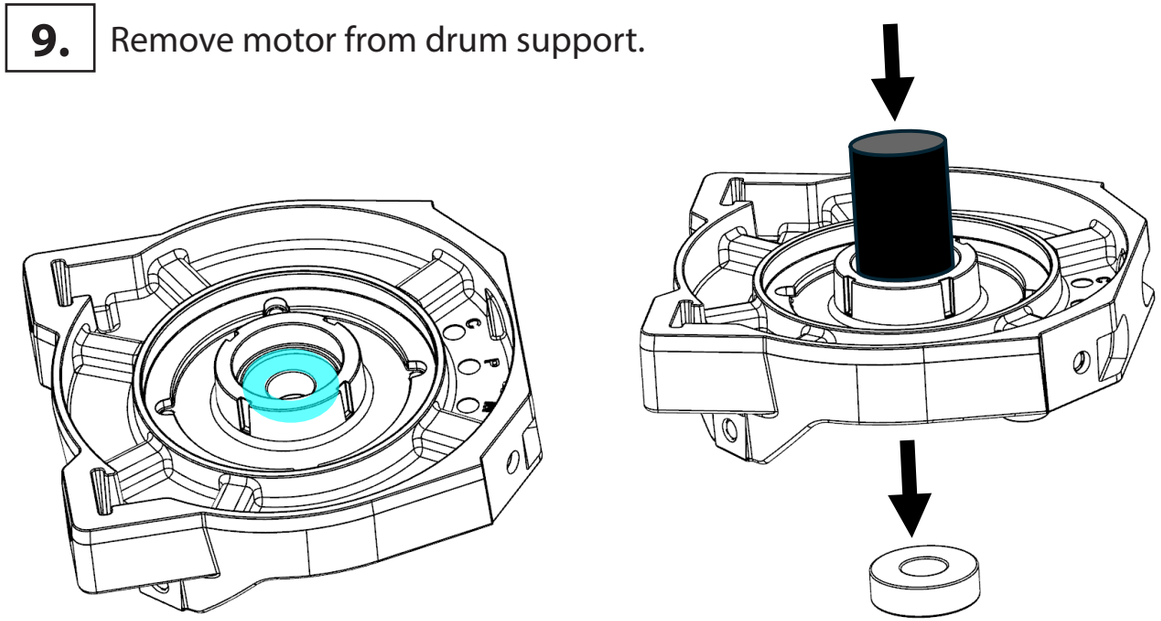

2.5 Motor Reassembly

1. Press in motor drum seal.

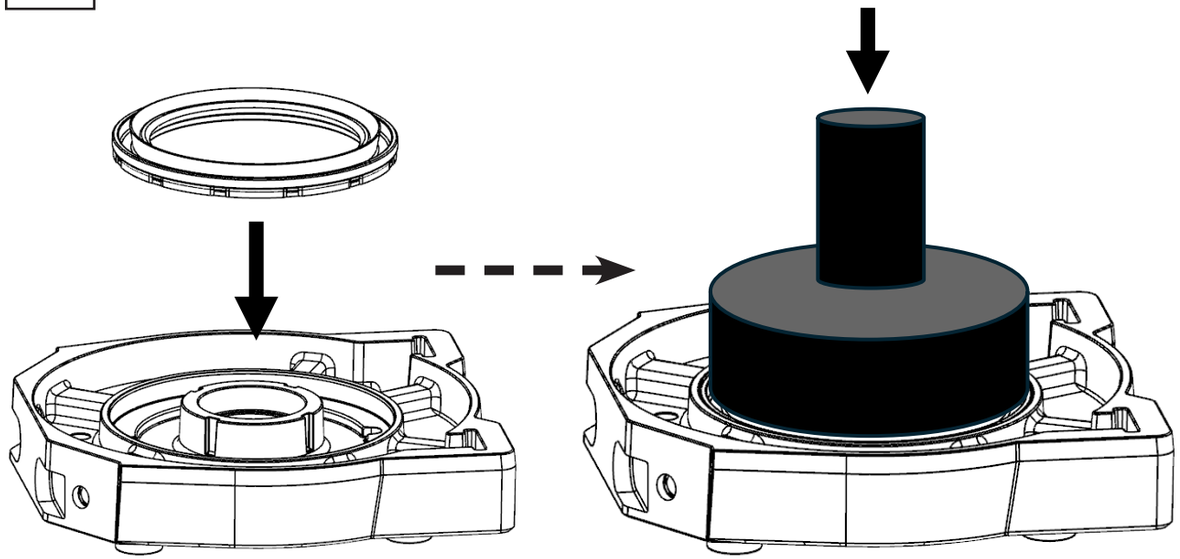

2. Install motor bushing.

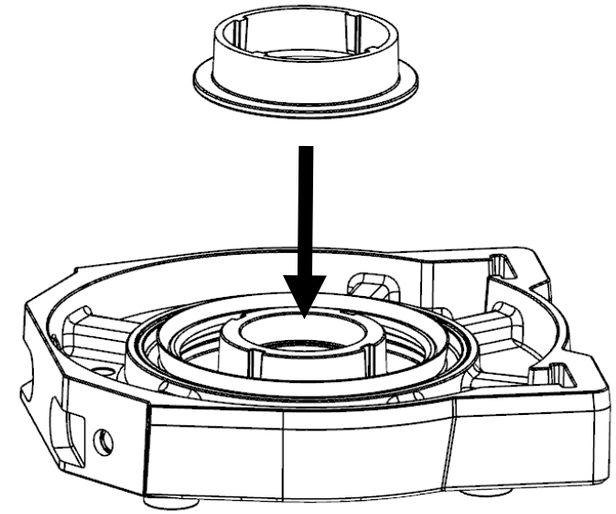

3. ⚠ Press seal until fully seated

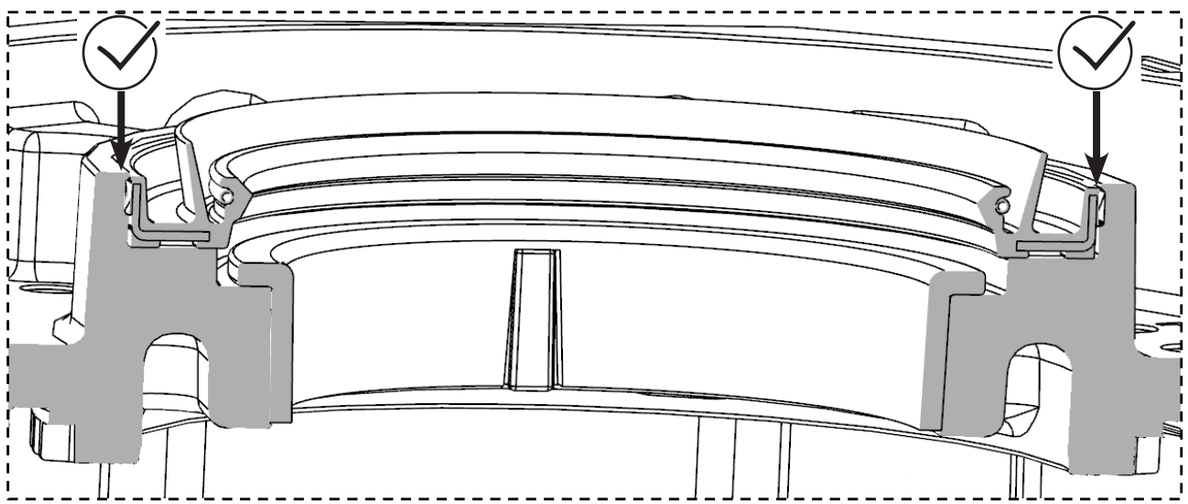

Verify seal does not sit above pocket wall

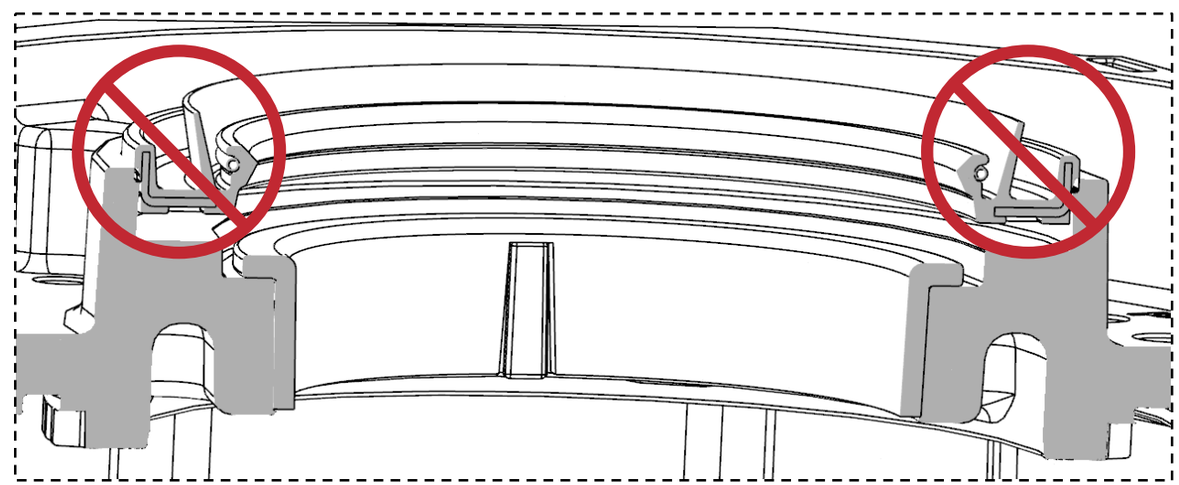

4. Flip motor drum support

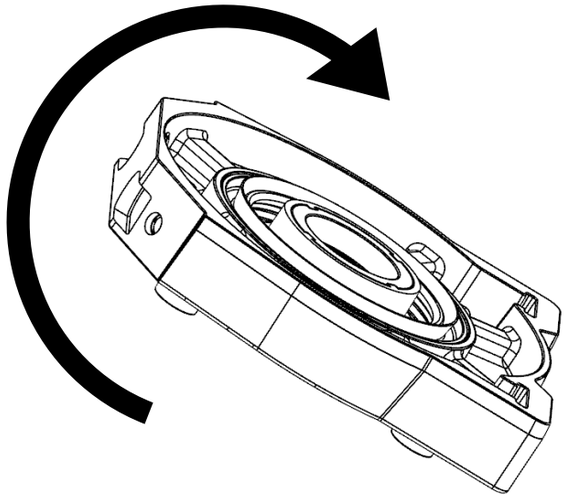

5. Press in motor bearing

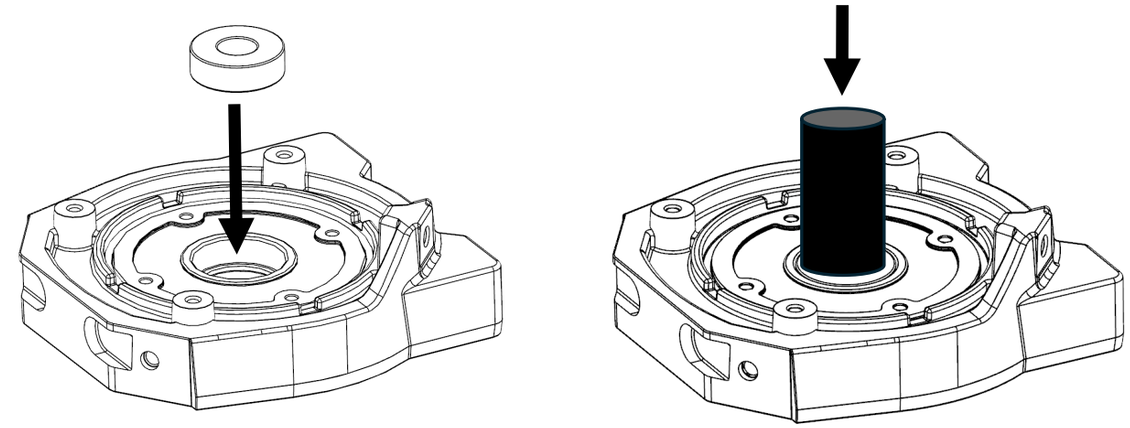

6. Install motor o-ring.

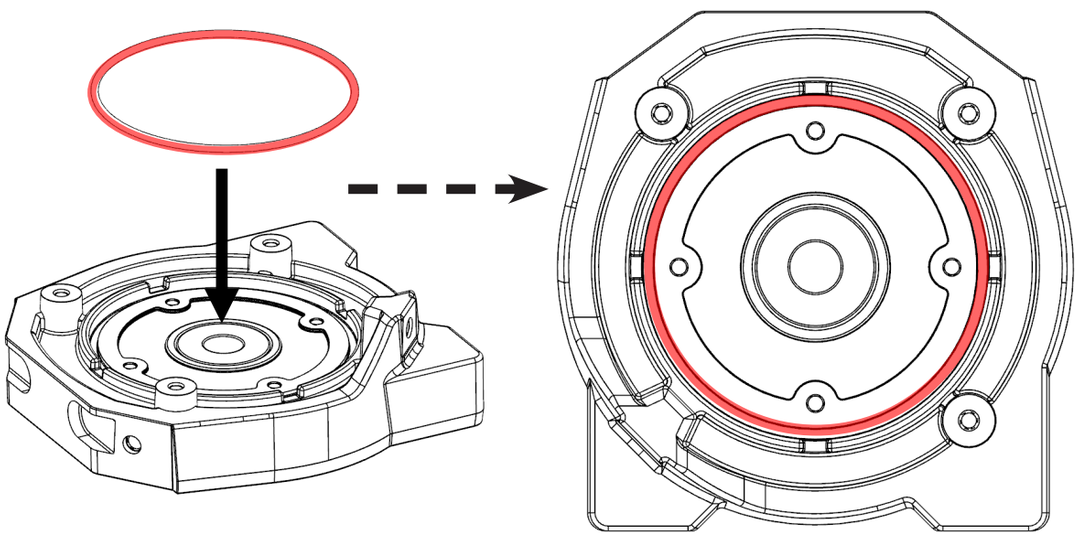

Ensure ground surface is clean!

7.

Do **NOT** hold or place motor with shaft UP, the motor may disassemble.

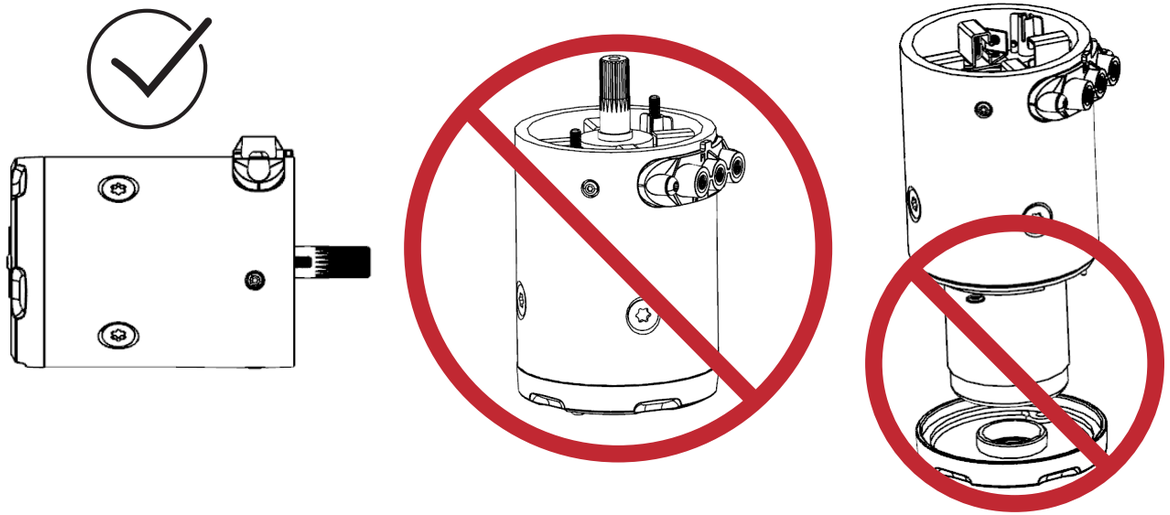

8. Install motor

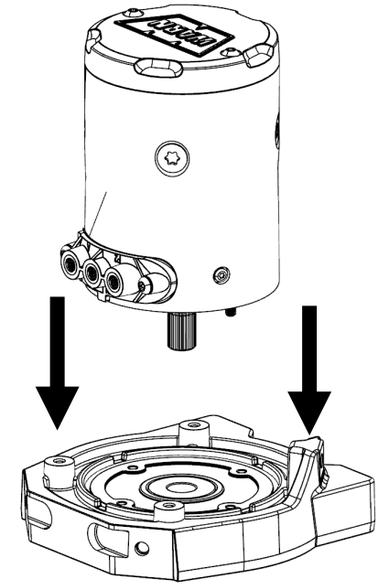

9. Install motor bolts

Head: T30
M6 x 1mm x 160mm
Torque: 10.6-13Nm
(94-115inlb)

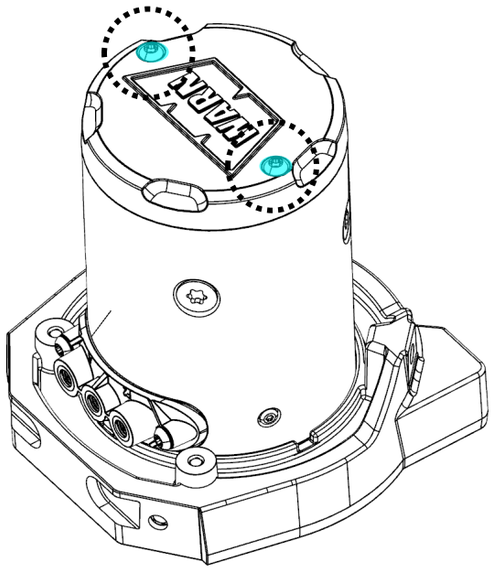

10. Grease motor drum seal

Shell Gadus
S5 V220 2
(7-11g)

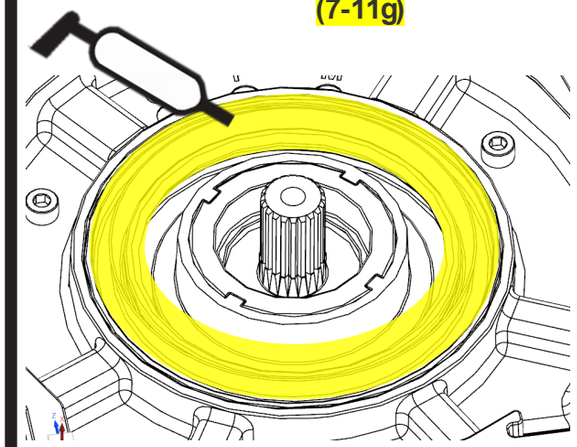

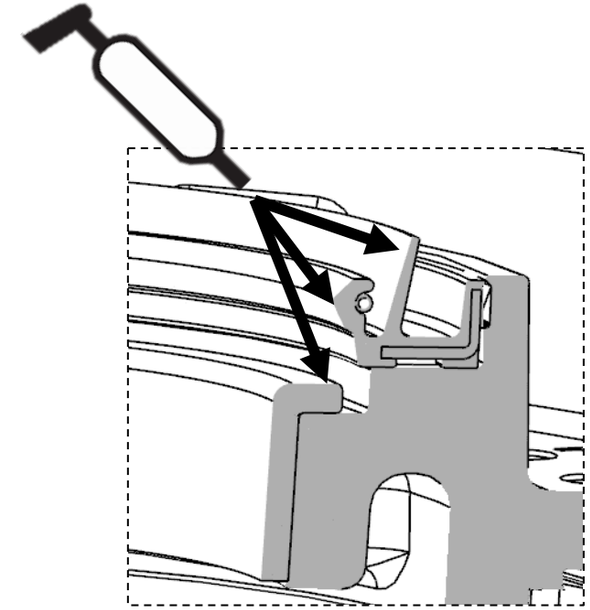

2.6 Geartrain Disassembly

1. Remove geartrain (Section 2.2, steps 1-3)

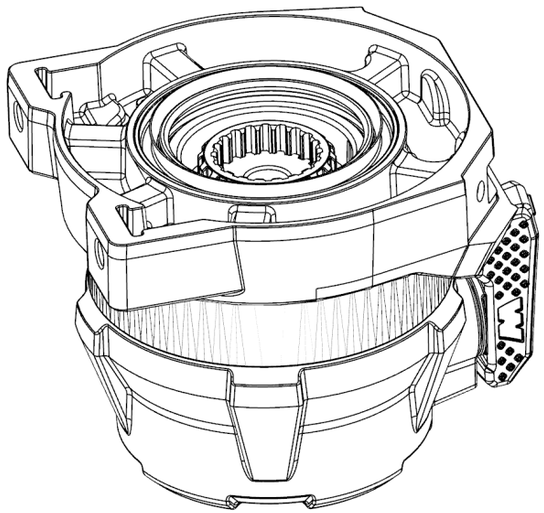

2. Remove drum driver assembly

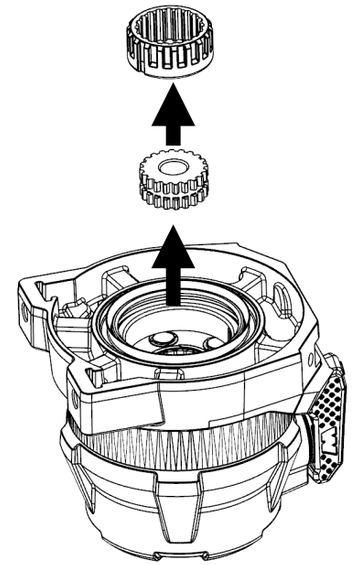

3. Remove geartrain bolts

Head: 4mm Hex
M5 x 0.8 x 60mm
Torque: 10.6-13Nm
(94-115inlb)

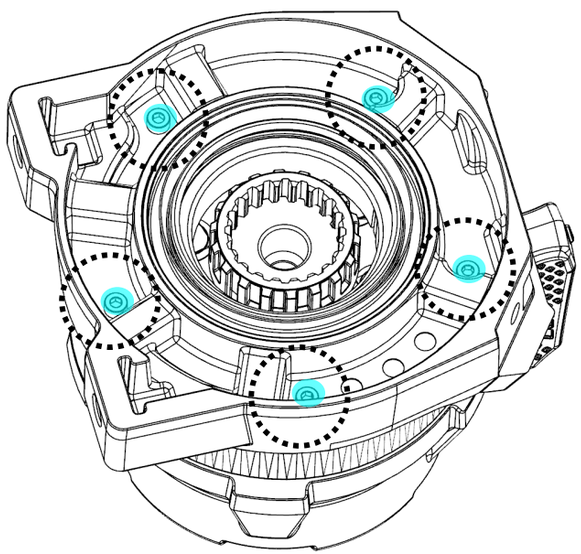

4. Remove geartrain drum support

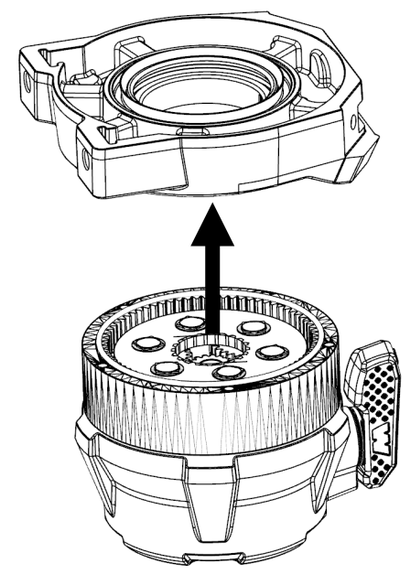

5. O-ring may be stuck to either part

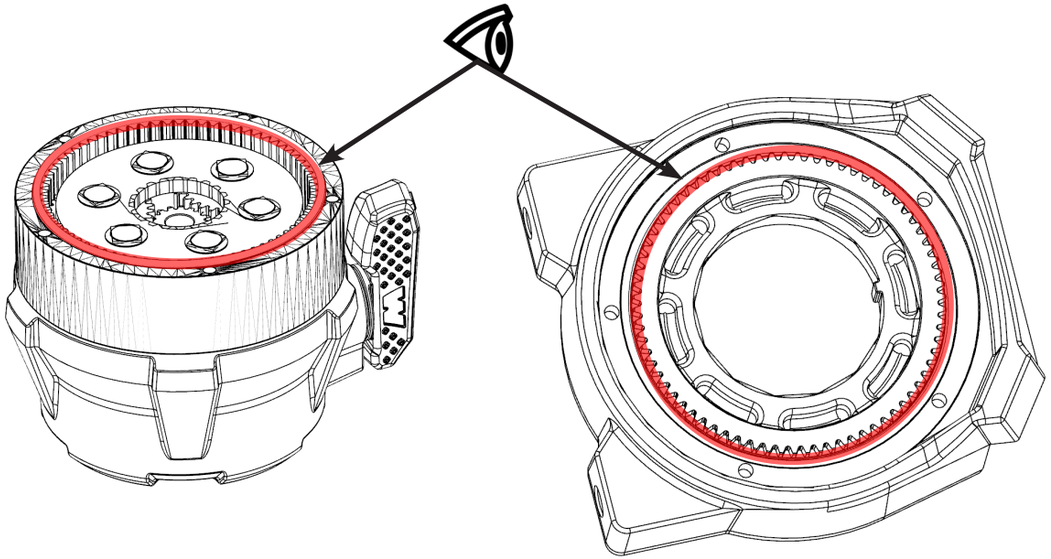

6. Remove 3rd stage ring gear and o-rings.

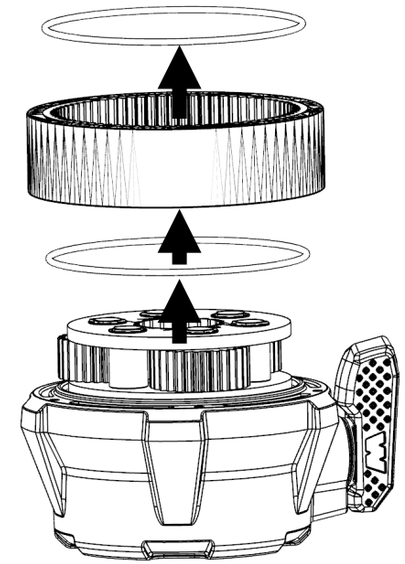

7. Remove 3rd stage carrier, thrust washer, and 2nd stage carrier assemblies.

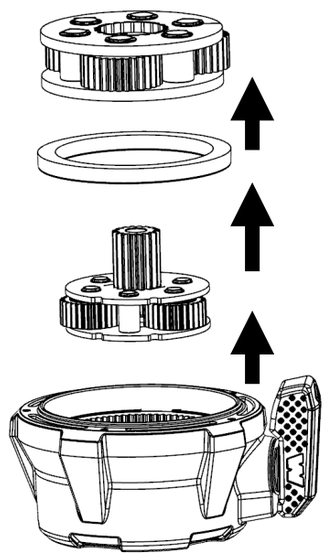

8. Remove 1st stage carrier and input gear.

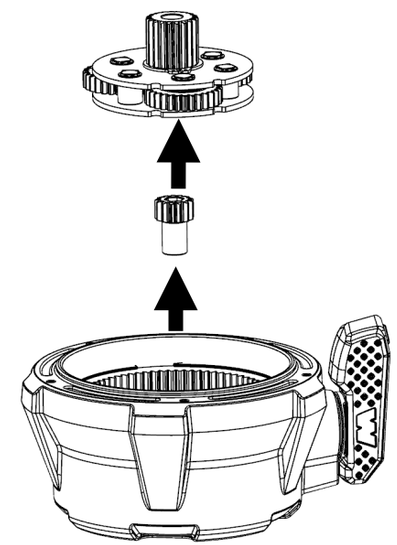

9. Remove 2nd stage ring gear snap ring.

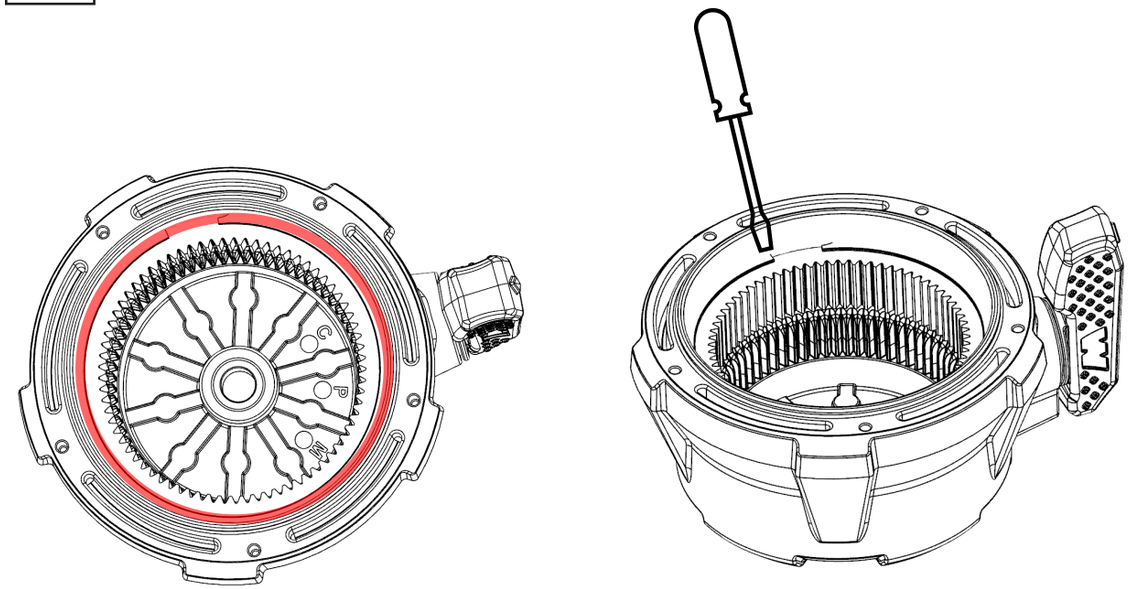

10. Remove 2nd stage ring gear.

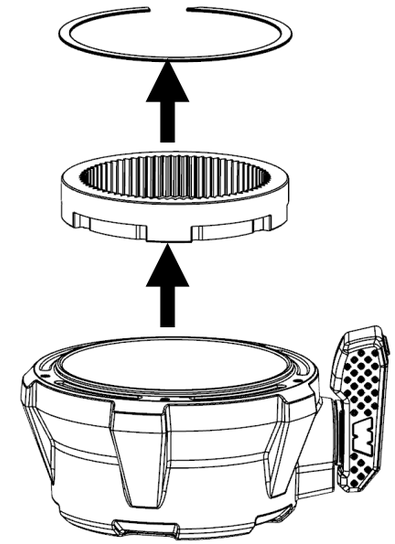

11. Remove clutch lever bolt.

Head: 4mm Hex
10-24, Custom Tip
Torque: 3-5Nm
(27-44inlb)

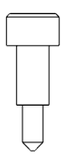

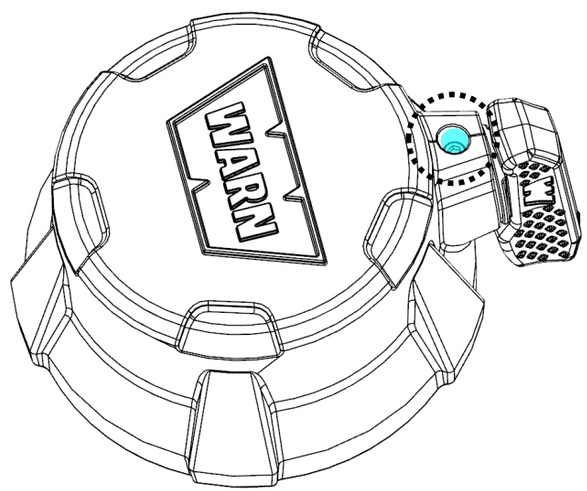

12. Remove clutch lever and X-ring seal.

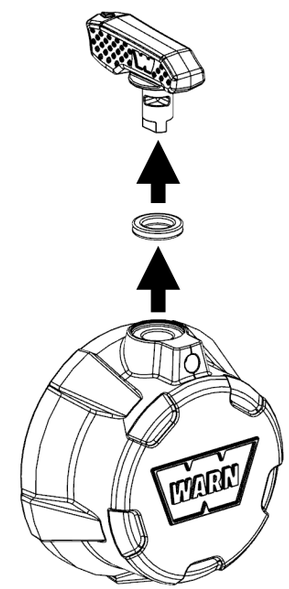

13. Remove geartrain drum seal.

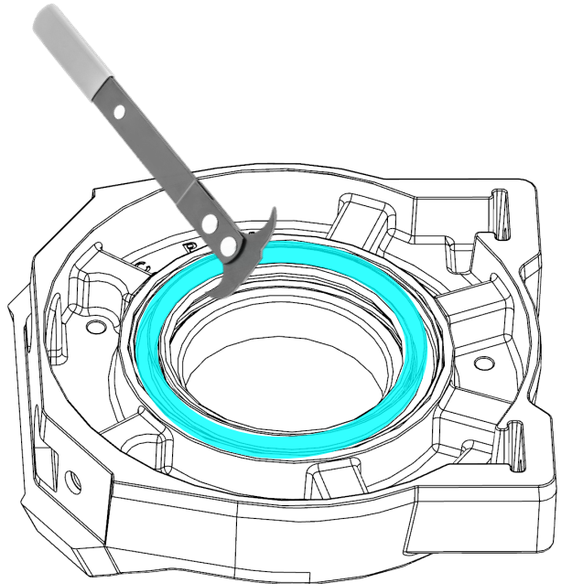

14. Remove geartrain drum bushing.

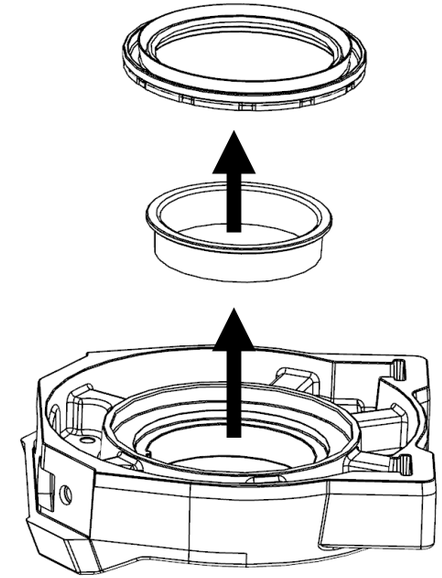

2.7 Geartrain Reassembly

1. Grease X-ring seal.

Shell Gadus S5 V150XKD (light coat)

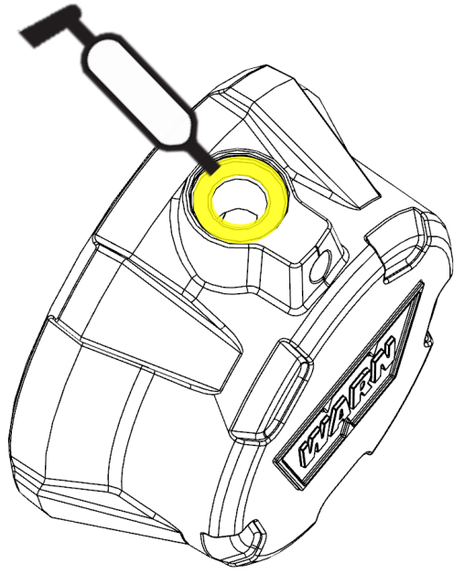

2. Install clutch lever and X-ring seal.

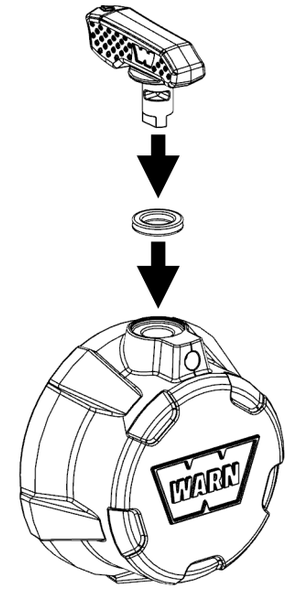

3. Install clutch lever bolt.

Head: 4mm Hex
10-24, Custom Tip
Torque: 3-5Nm
(27-44inlb)

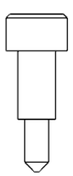

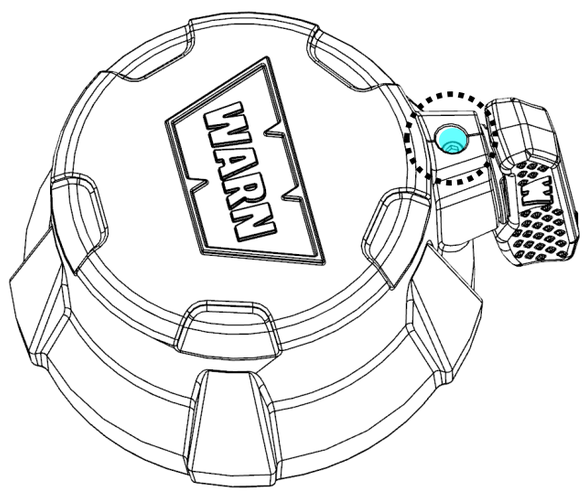

4. Grease and install 2nd stage ring gear and snap ring.

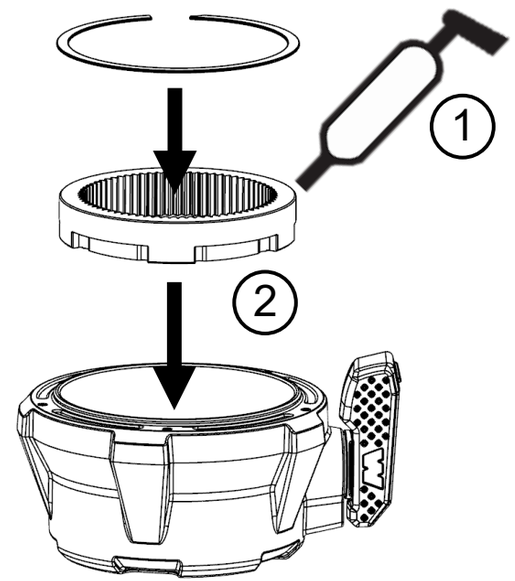

Aeroshell Fluid 4 Mineral Oil (light coat)

5. Seat 2nd stage ring gear snap ring.

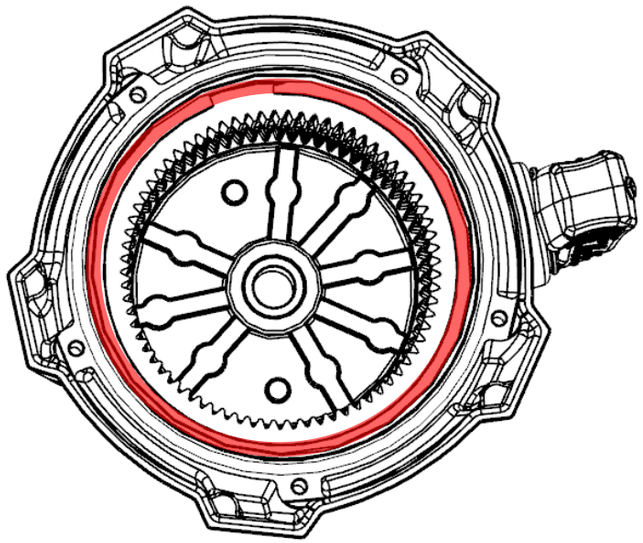

6. Verify snap ring is seated and pushed into snap ring groove.

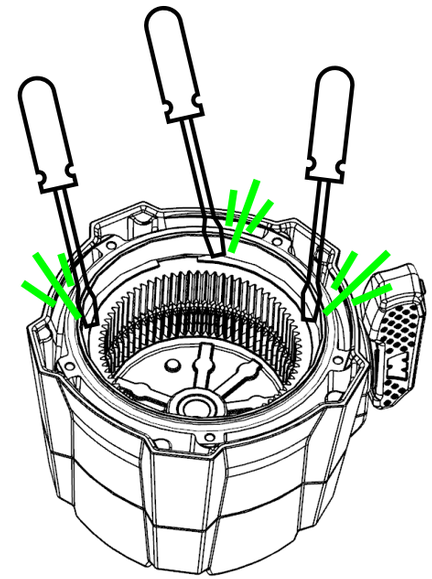

7. ⚠ Inspect 2nd stage snap ring.

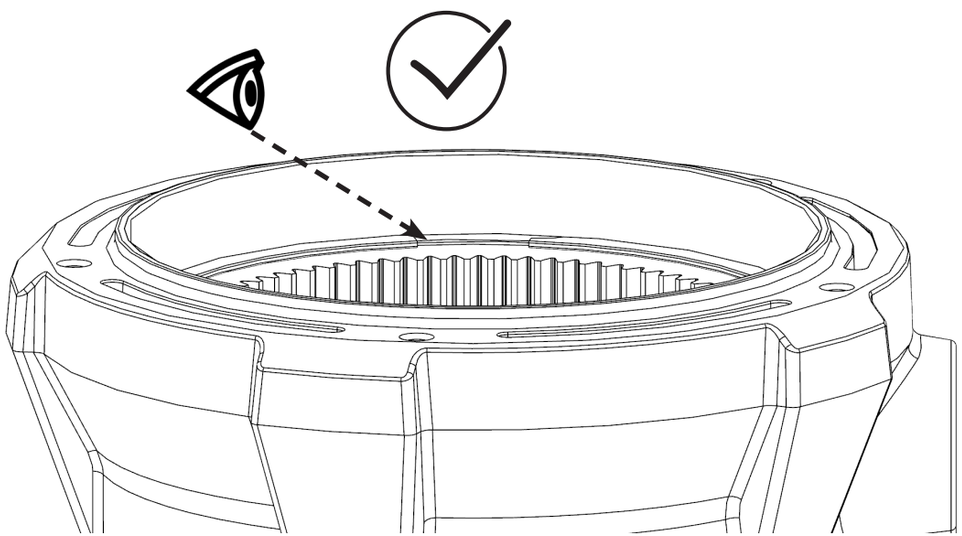

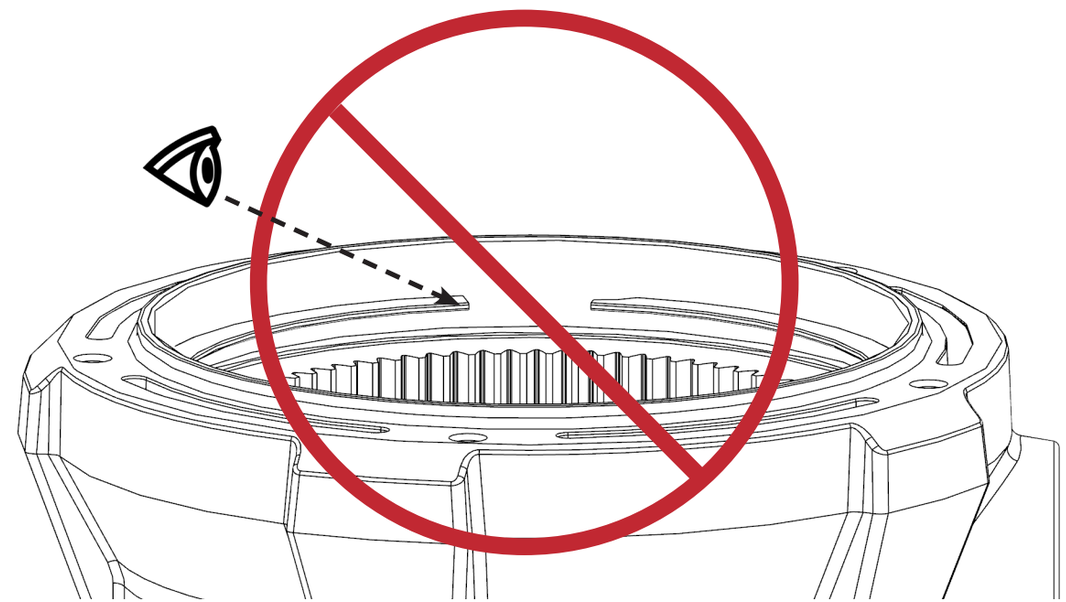

8. Verify turning the clutch handle engages and disengages the 2nd stage ring gear.

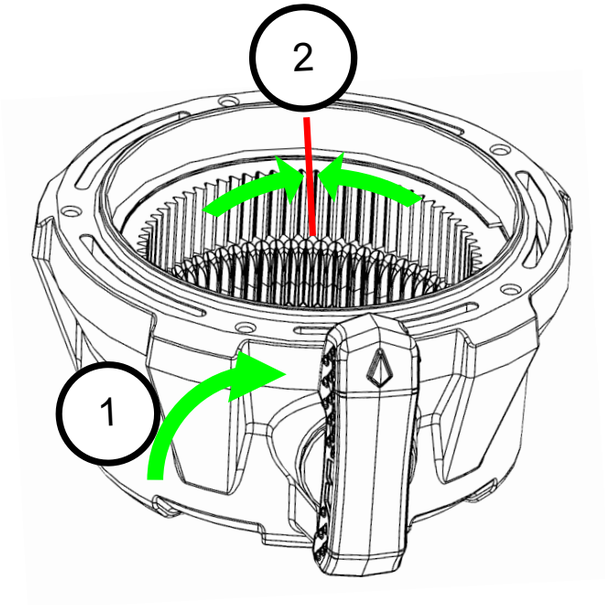

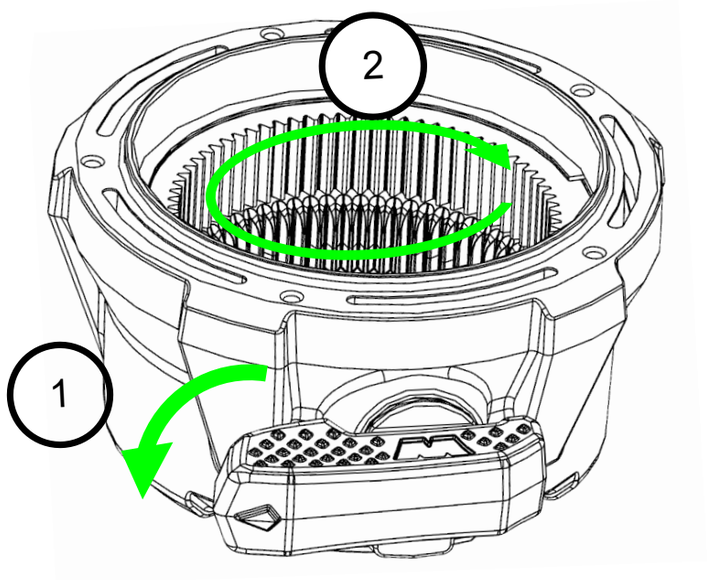

9. Install geartrain drum bushing and seal.

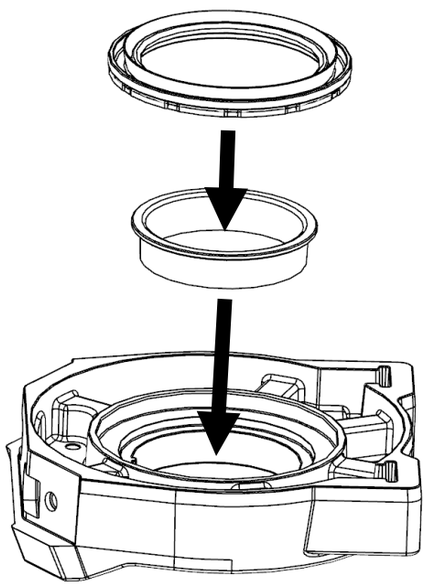

10. Press in geartrain drum seal.

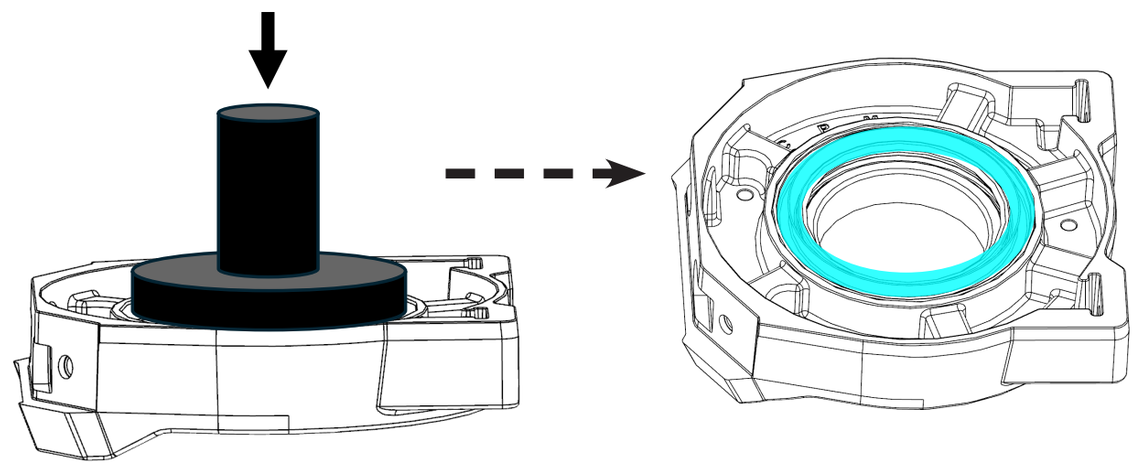

11. Press seal until fully seated

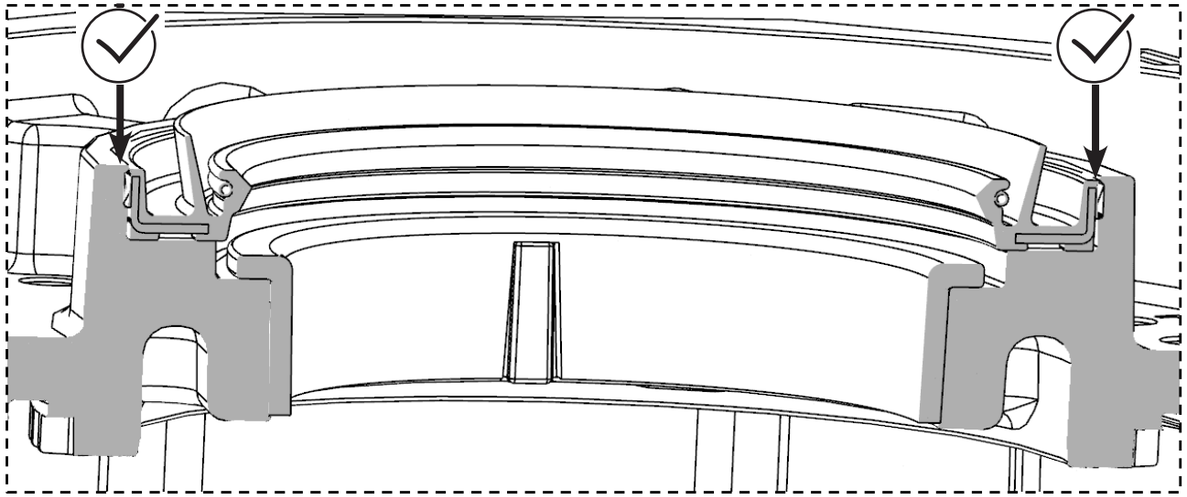

Verify seal does not sit above pocket wall

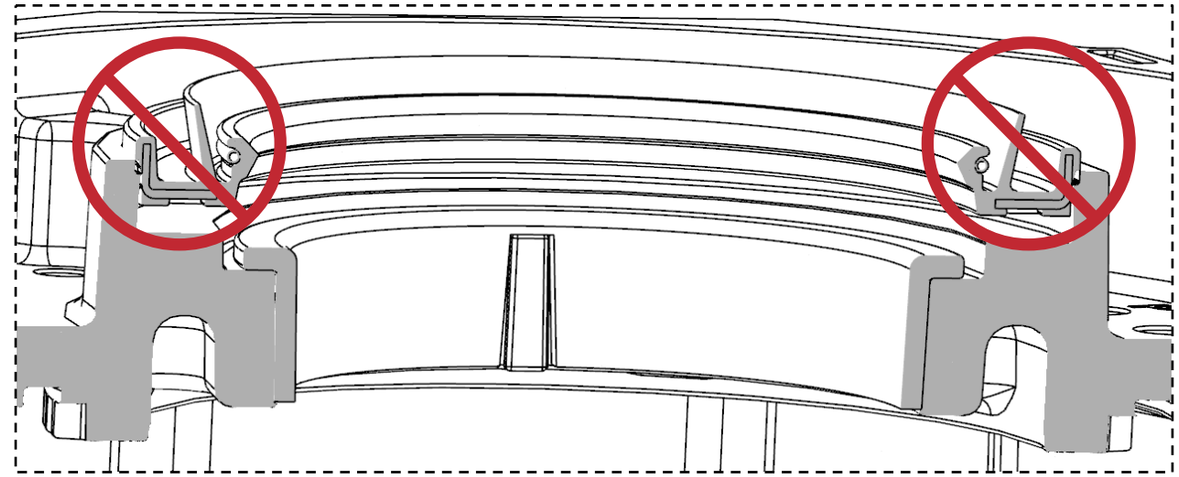

12. Install lower 3rd stage ring gear o-ring.

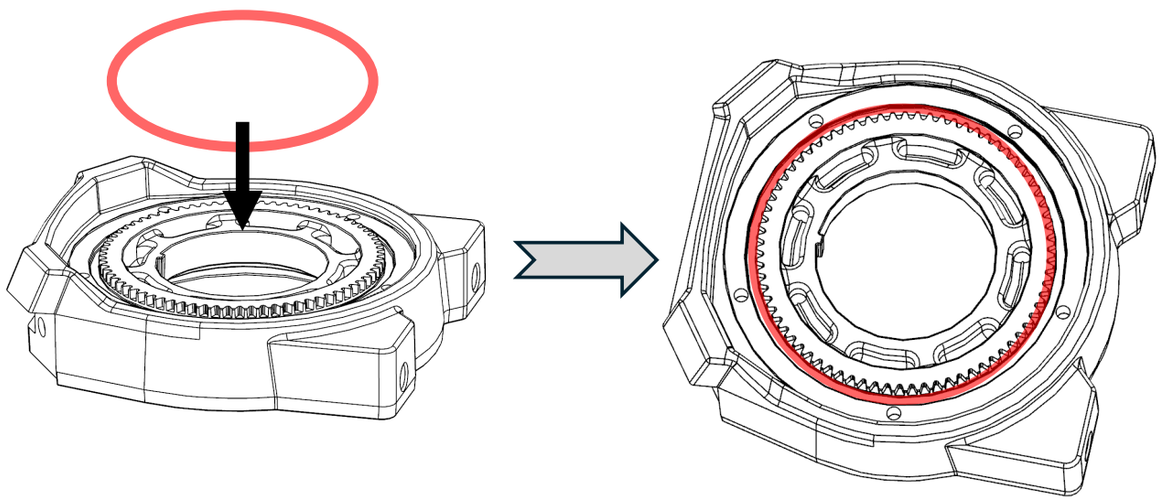

13. Install 3rd stage ring gear.

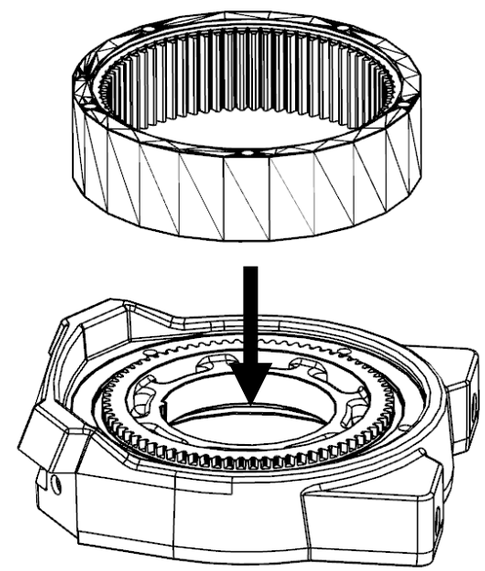

14. Verify the dimple on the 3rd stage ring gear is visible and in the 12' o-clock position.

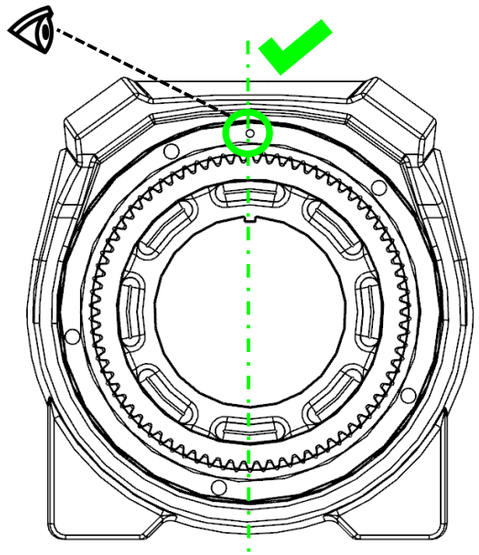

15. Grease the 3rd stage ring gear, filling each tooth completely.

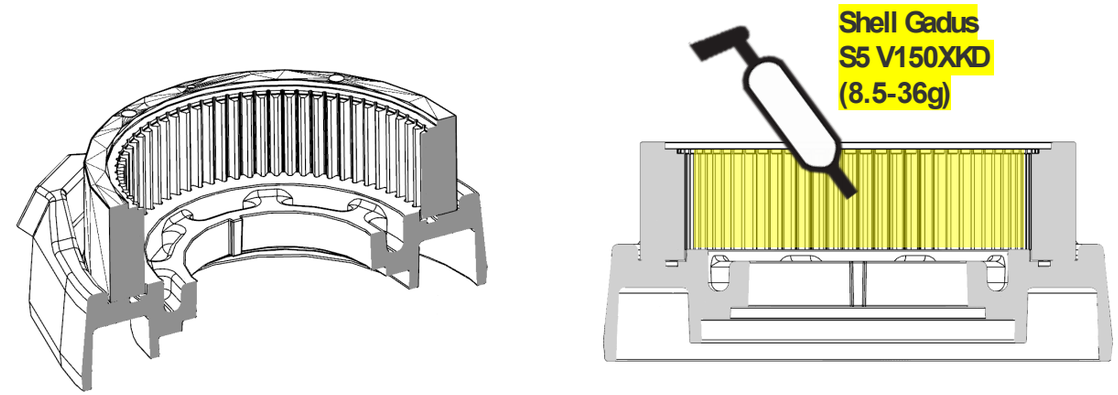

16. Install the upper 3rd stage ring gear o-ring.

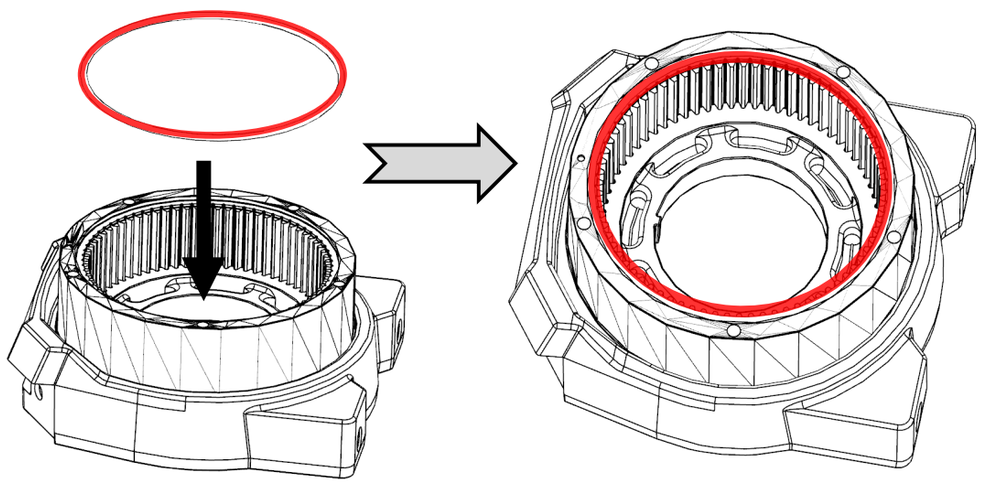

17. Install the 3rd stage carrier.

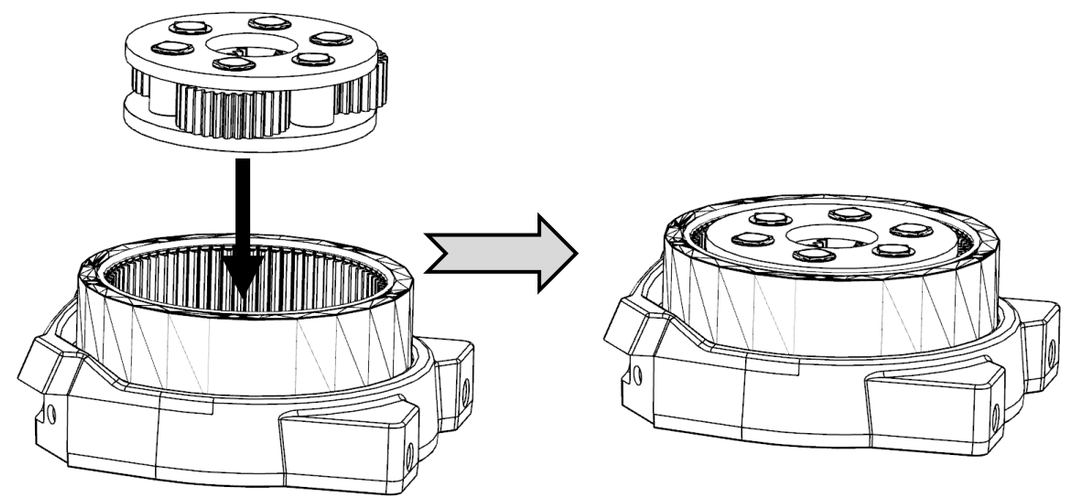

18. Grease 2nd stage sun gear, filling each tooth completely.
Install the thrust washer and 2nd stage carrier.

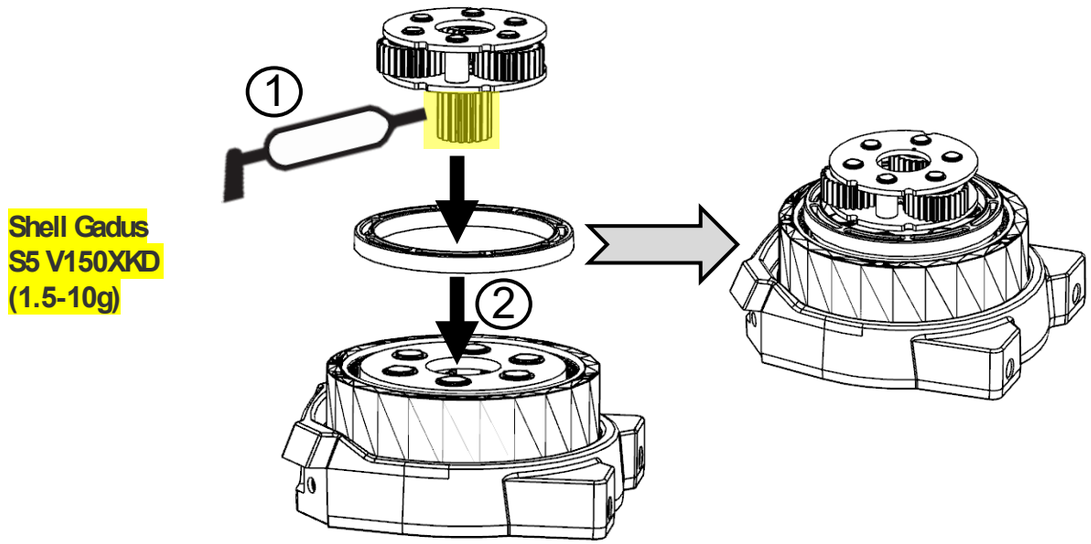

19. Grease and install the 1st stage sun gear, filling each tooth completely.

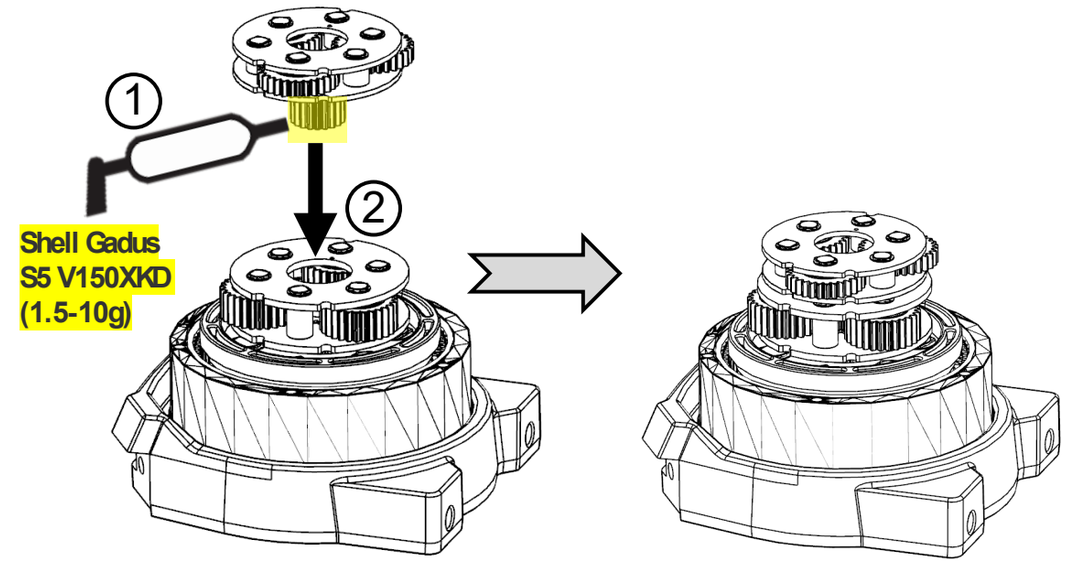

20. Install the upper 3rd stage ring gear o-ring.

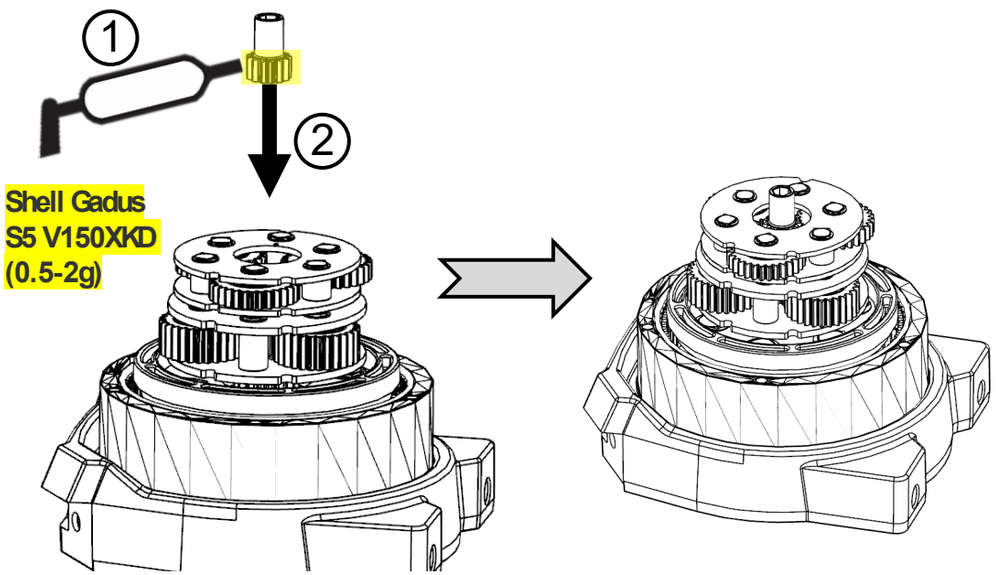

21. Install the upper 3rd stage ring gear o-ring.

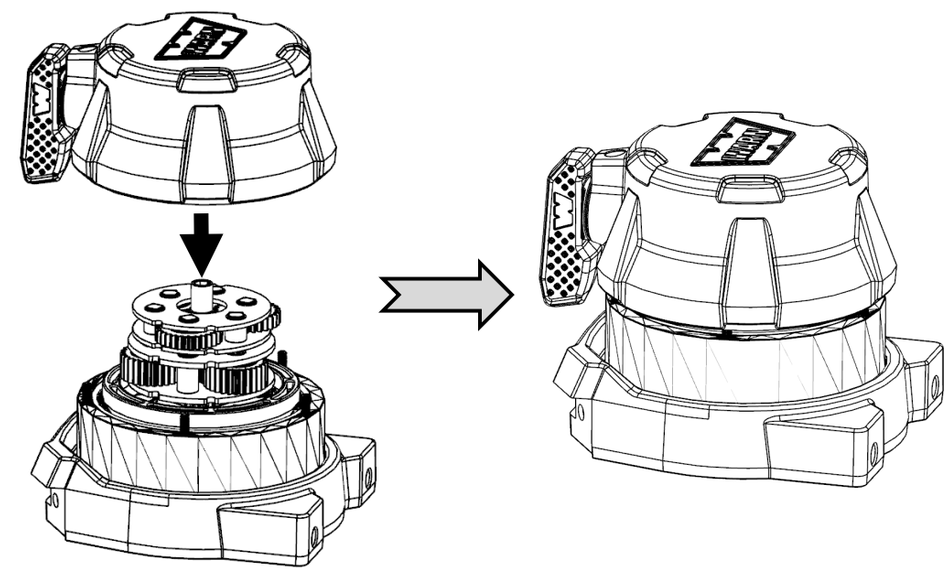

23. Install the driveshaft.

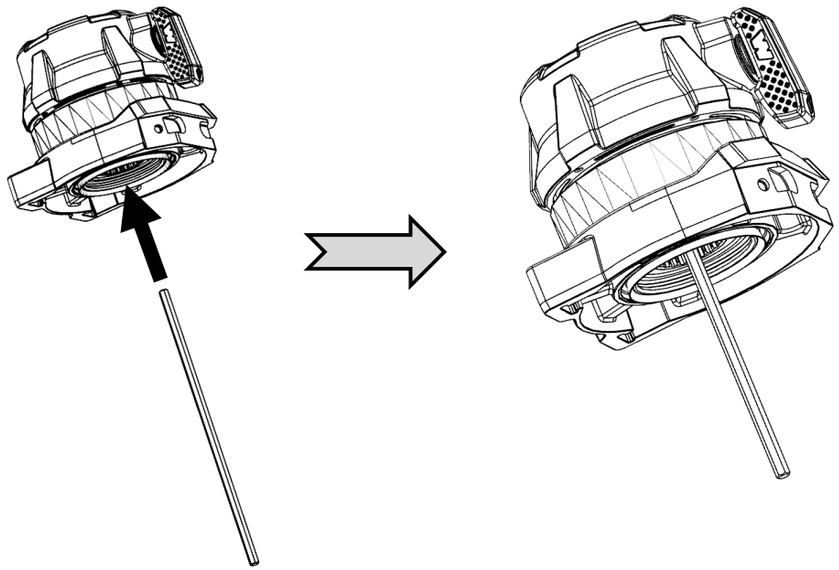

24. Apply light pressure to the end cap while spinning the driveshaft to seat the end housing.

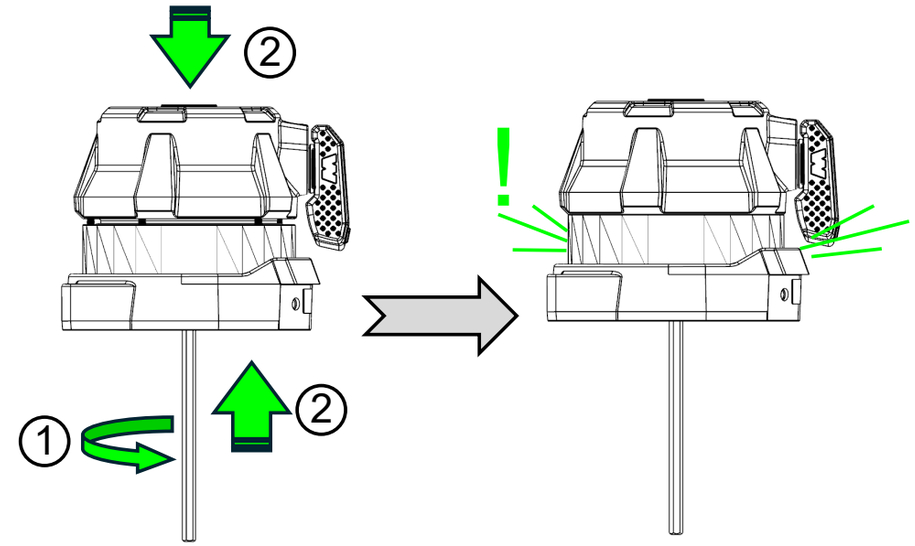

25. Hold end housing and drum support together and flip upside down seat the end housing.

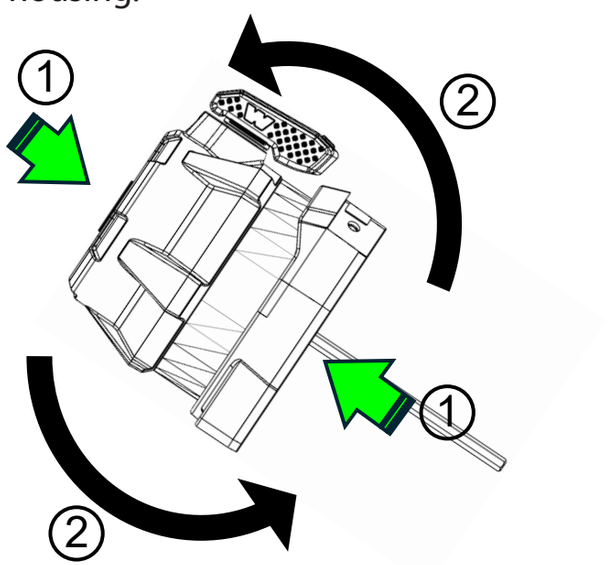

26. Inspect the end housing gap to verify the end housing is seated.

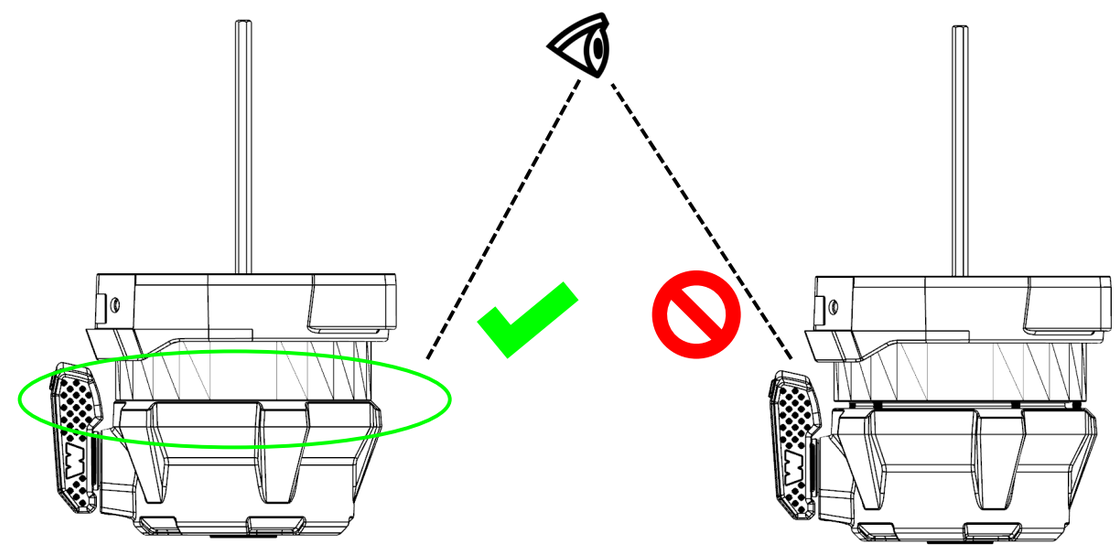

27. Install the geartrain bolts.

Head: 4mm Hex
M5 x 0.8 x 60mm
Torque: 10.6-13Nm
(94-115inlb)

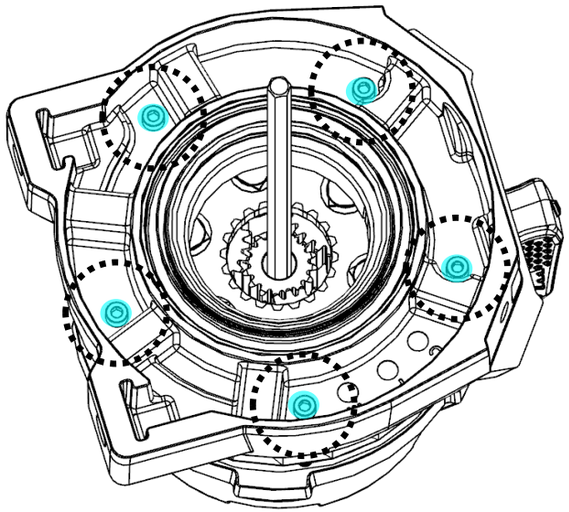

28. Install the drum driver assembly.

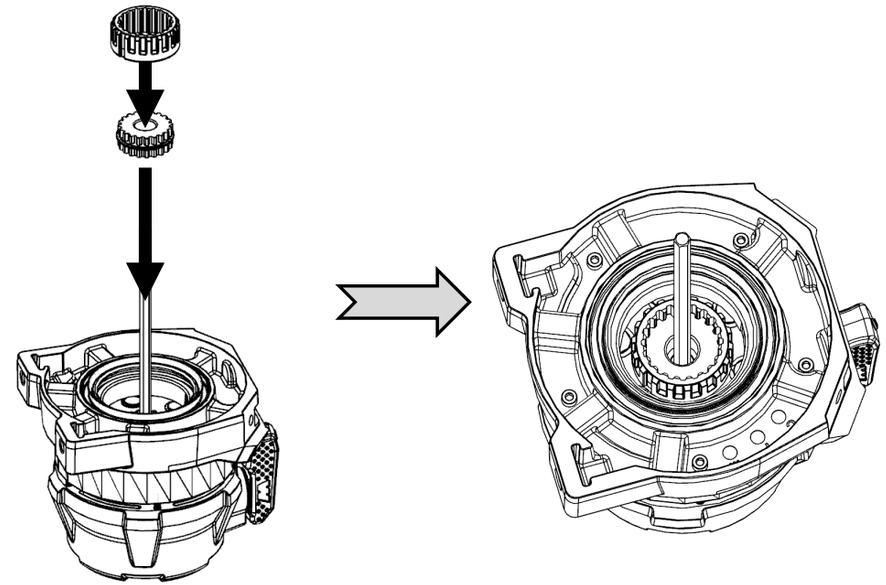

29. Grease the geartrain drum seal.

Shell Gadus
S5 V220 2
(7-11g)

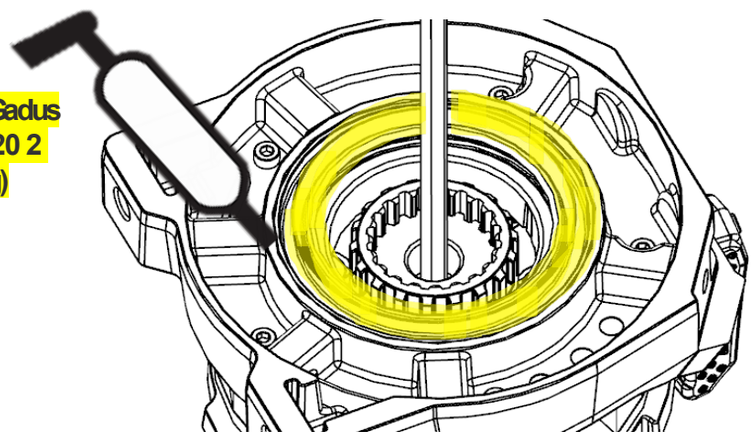

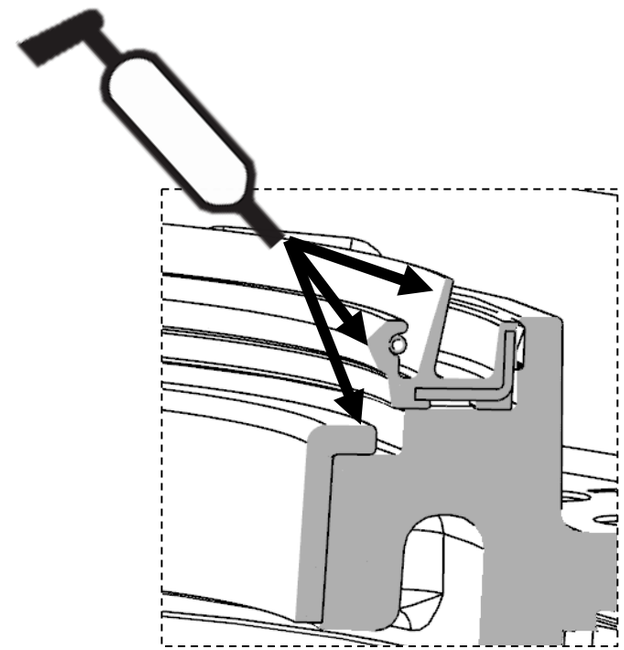

2.8 Control Pack Disassembly

1. Remove Control Pack (Section 2.2, steps 1-7)

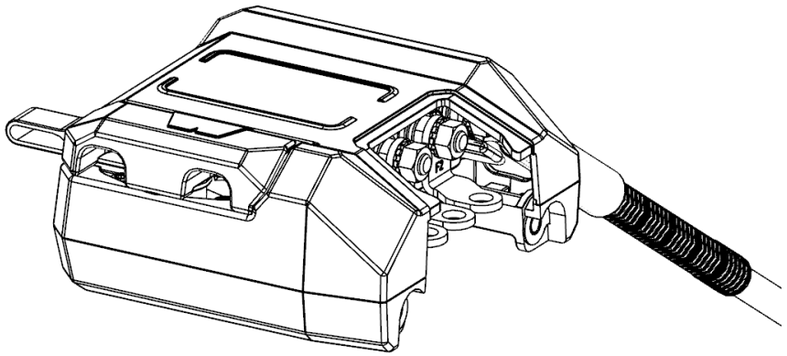

2. Remove d-plug cover.

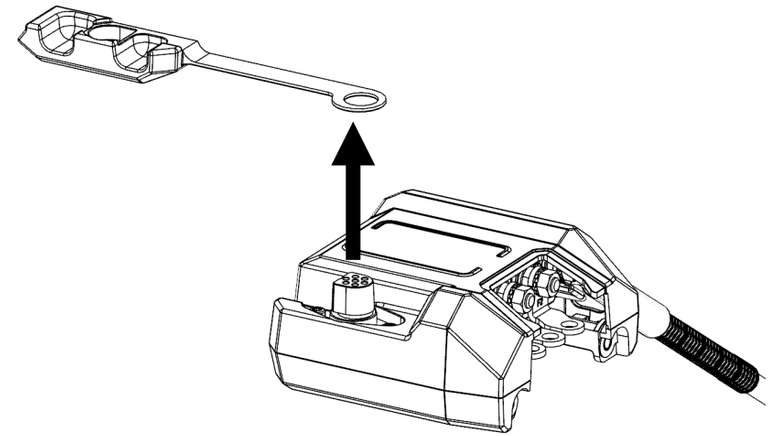

3. Remove control pack cover bolts.

Head: T25
M5 EJOT Thread x 12mm
Torque: 1-1.9Nm
(9-17inlb)

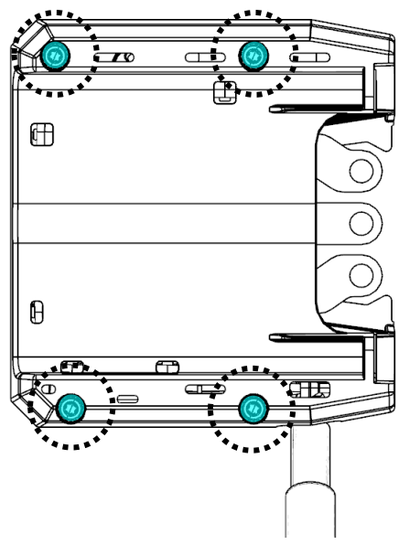

4. Remove control pack cover.

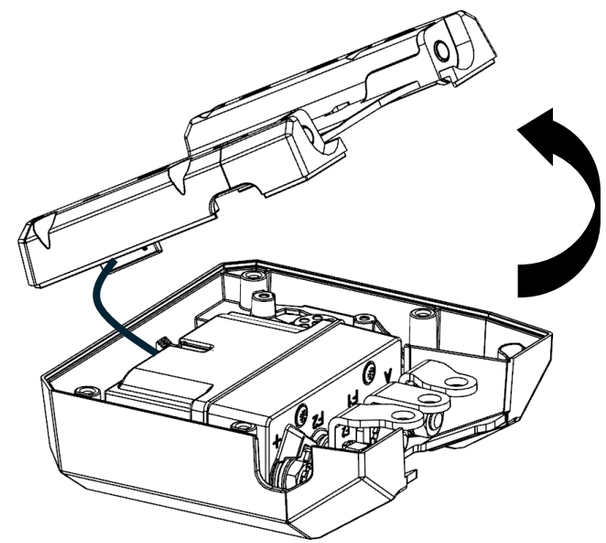

5. Remove ground cables from terminals.

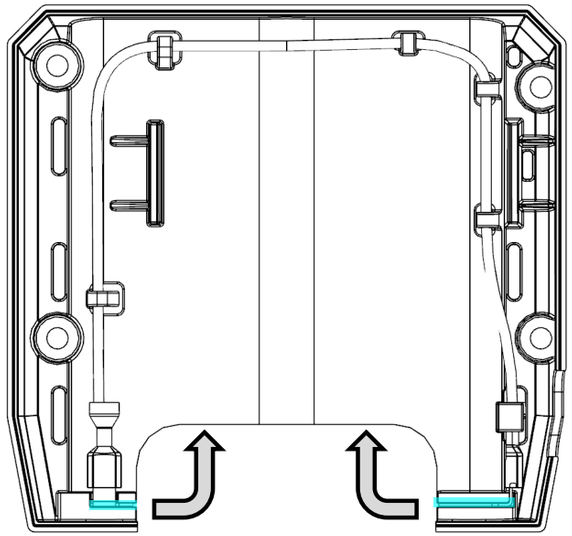

6. Lift contactor from control pack.

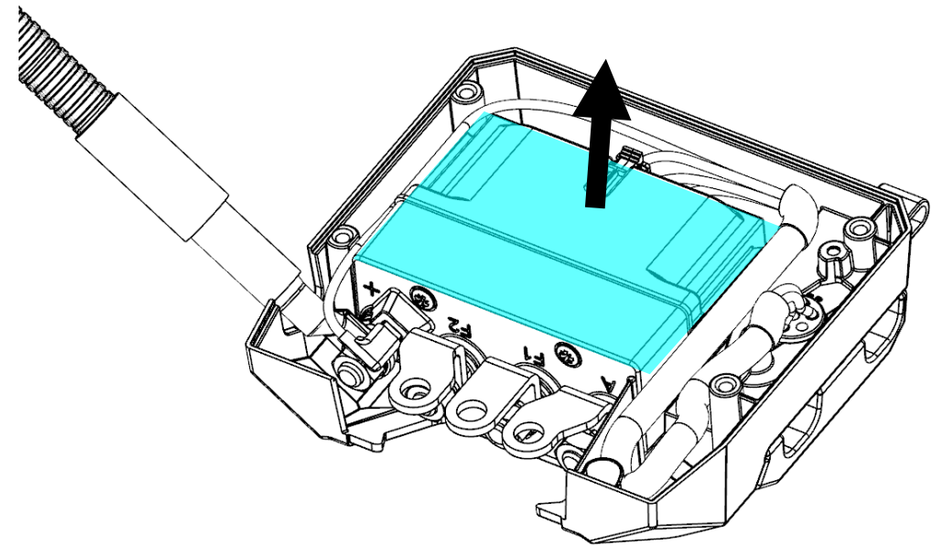

7. Disconnect ground cable and power cable.

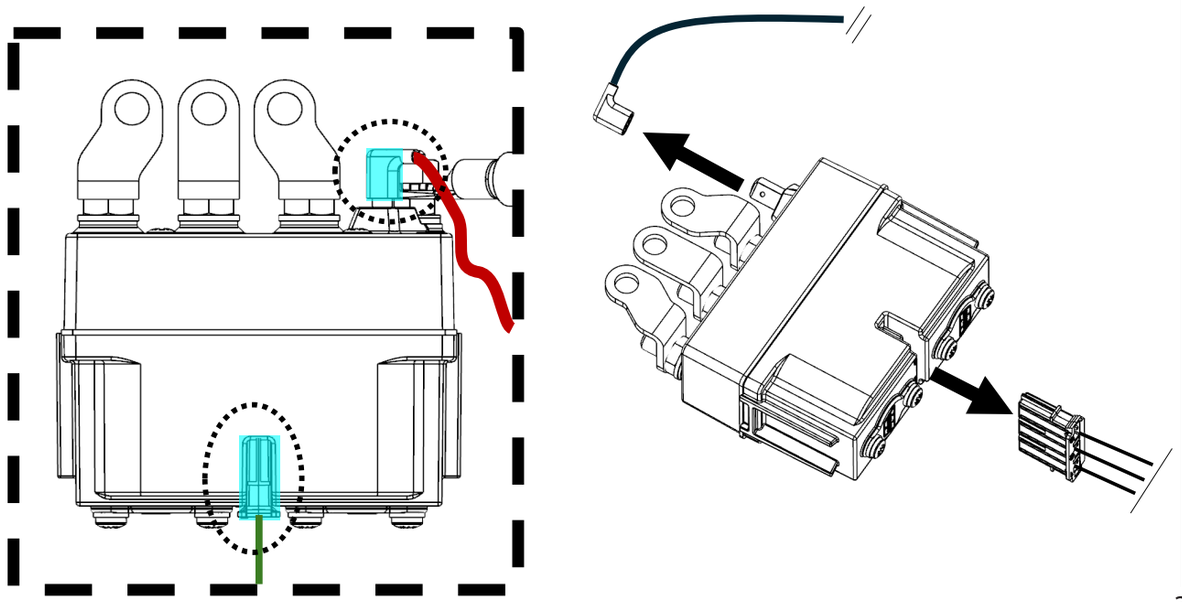

8. Remove contactor nuts, busbars, and power cable.

Head: 13mm Hex
M8 x 1.25
Torque: 8-9.5Nm
(71-84inlb)

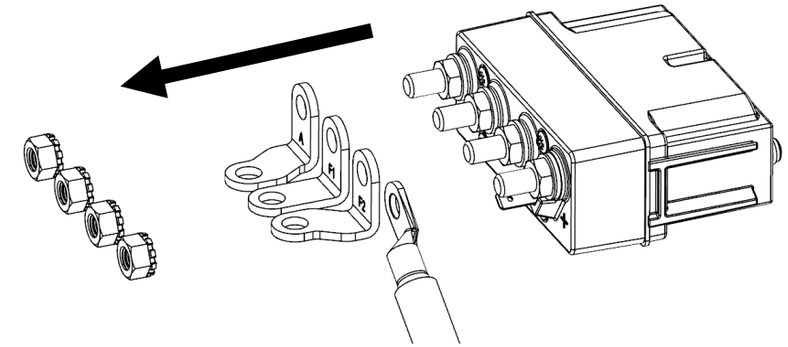

9. Remove Screws from Control Harness.

Head: T25
M5 EJOT PT x 12mm
Torque: 1-1.9Nm
(9-17inlb)

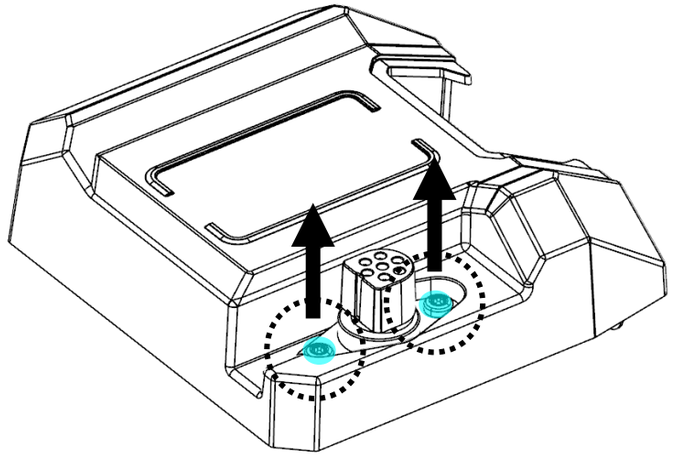

10. Remove Control Harness from Control Pack Cover.

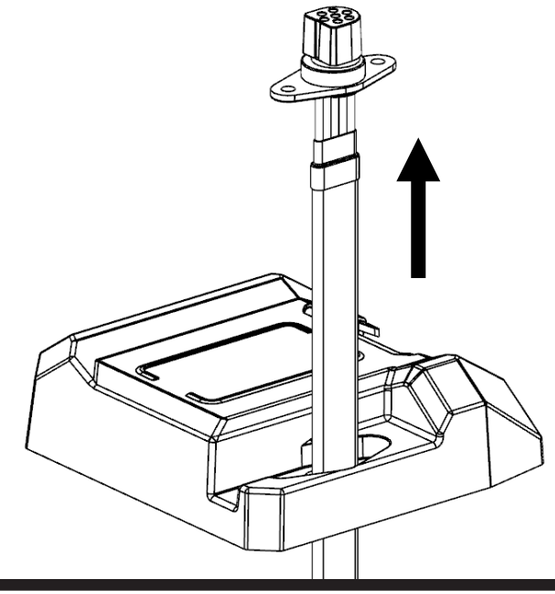

2.9 Control Pack Reassembly

1. Install control harness in control pack cover

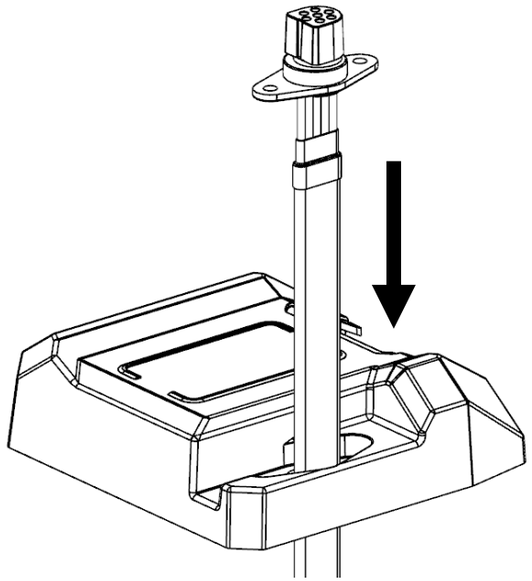

2. Install control harness screws

Head: T25
M5 EJOT PT x 12mm
Torque: 1-1.9Nm
(9-17inlb)

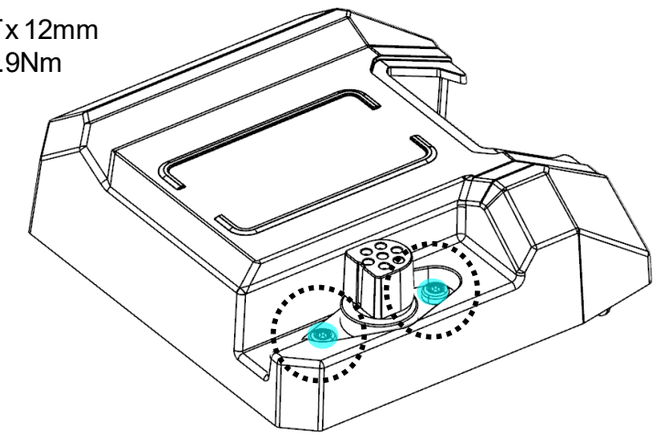

3. Install bus bars and ground cable

Head: 13mm Hex
M8 x 1.25
Torque: 8-9.5Nm
(71-84inlb)

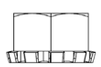

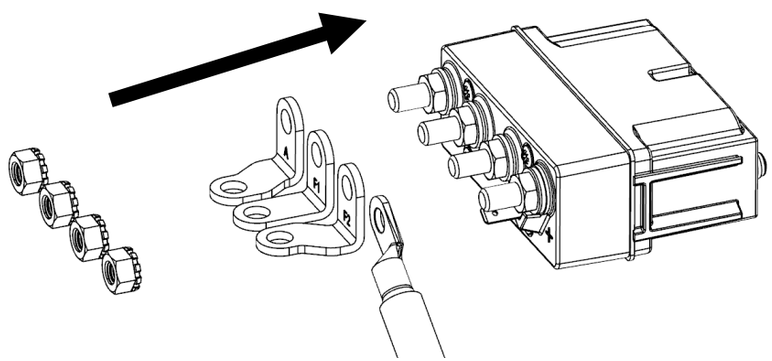

4. Install ground cable & power cable

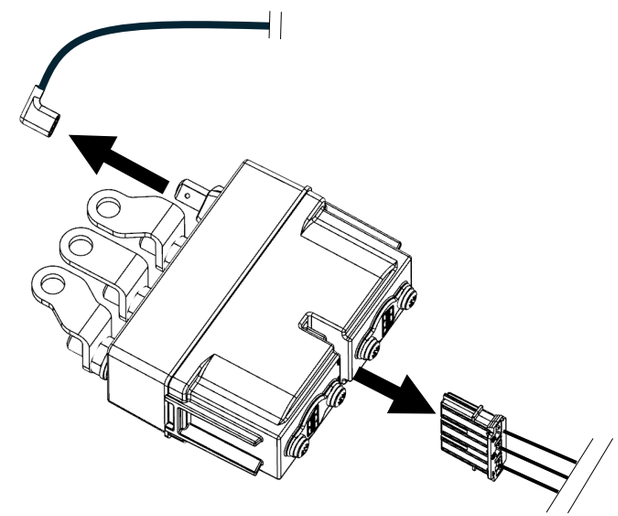

5. Place contactor into control pack.

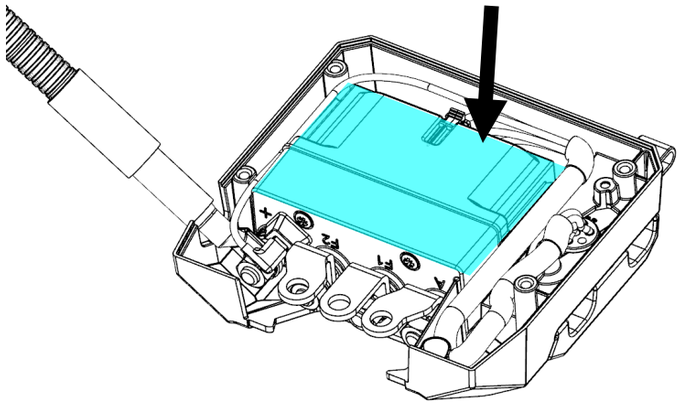

6. Install wires.

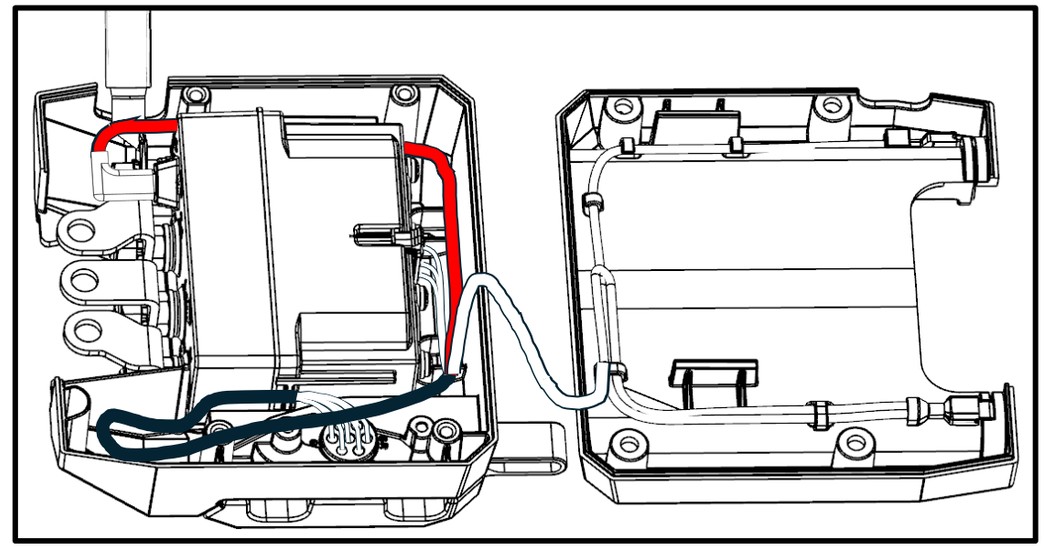

7. Close control pack.

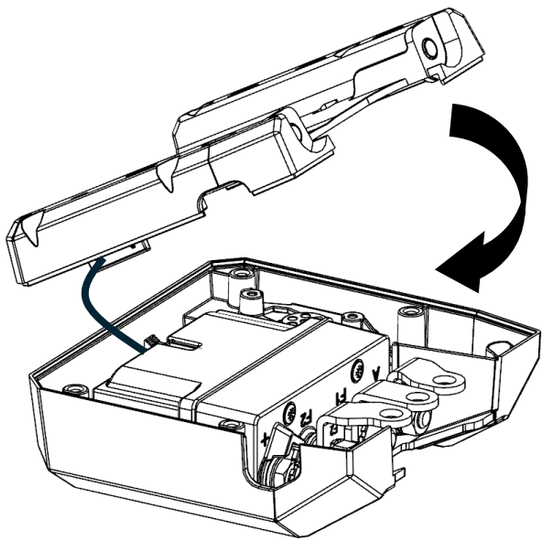

8. Install control pack bolts.

Head: T25
M5 EJOT Thread x 12mm
Torque: 1-1.9Nm
(9-17inlb)

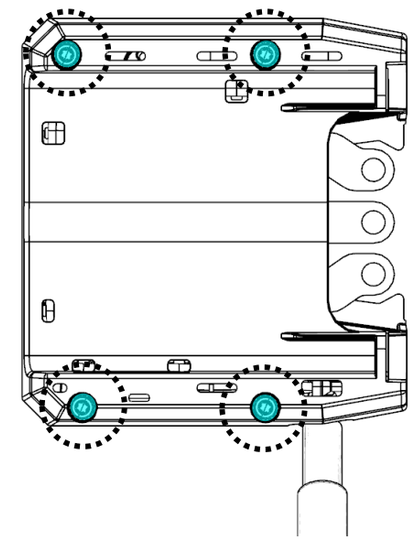

2.10 Brake Disassembly

1. Press or tap the brake assembly towards the open end of the drum. You can use drive shaft or dowel.

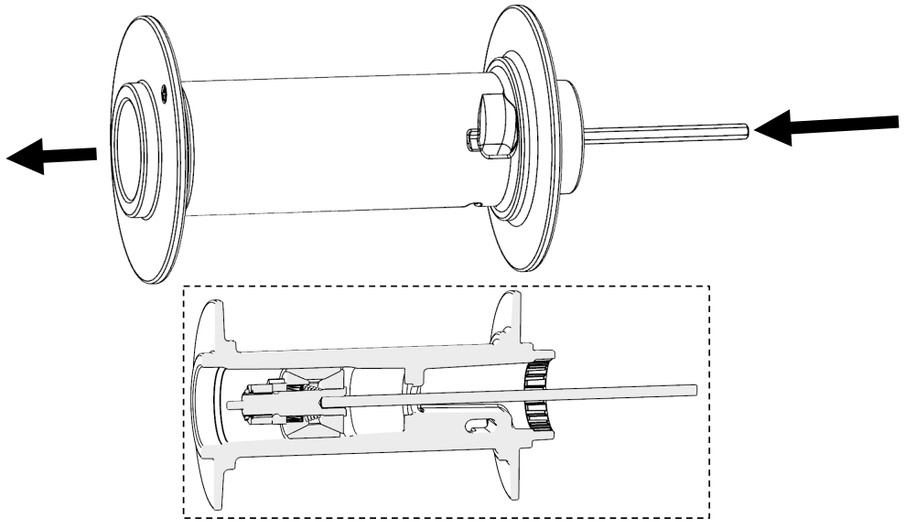

2. Once brake protrudes from the end of the drum bore, apply a cable tie to the perimeter of the brake to prevent the brake from disassembling.

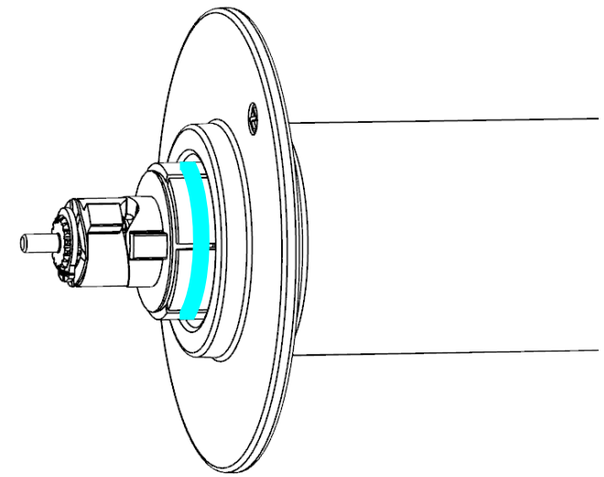

3. Press or tap brake completely out of drum bore.

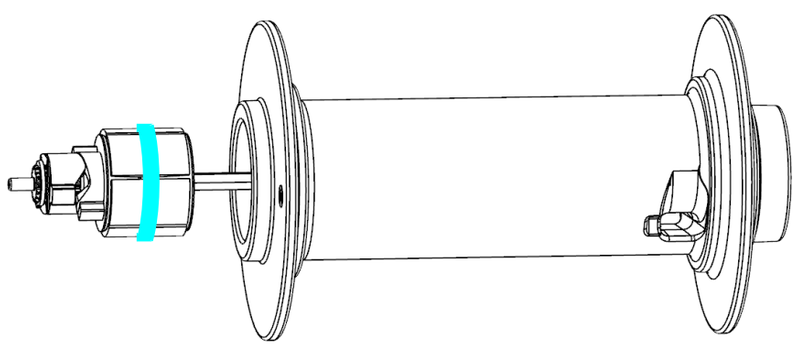

2.11 Brake Reassembly

1. Assemble brake driver with the brake assembly and insert into the drum bore. Rotate the brake driver clockwise to allow ease of assembly. Remove cable tie once brake pads are retained by the drum bore.

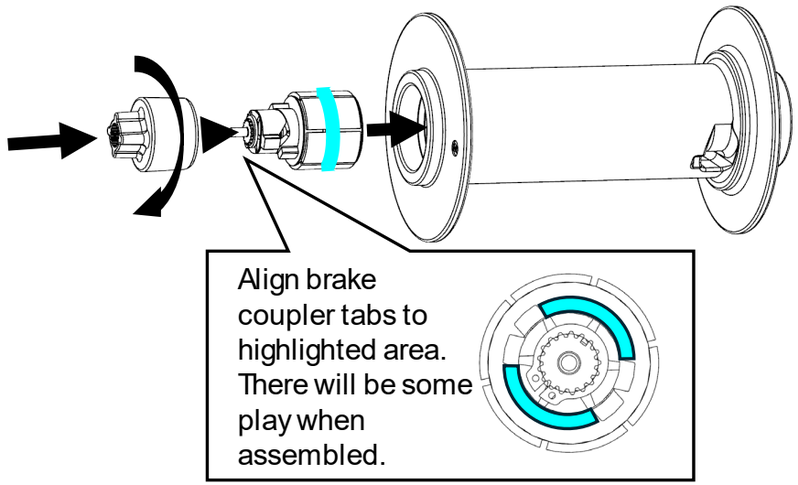

2. Continue until the brake assembly is fully seated inside the bore. The tip of brake assembly will be aligned with the second step of the drum bore.

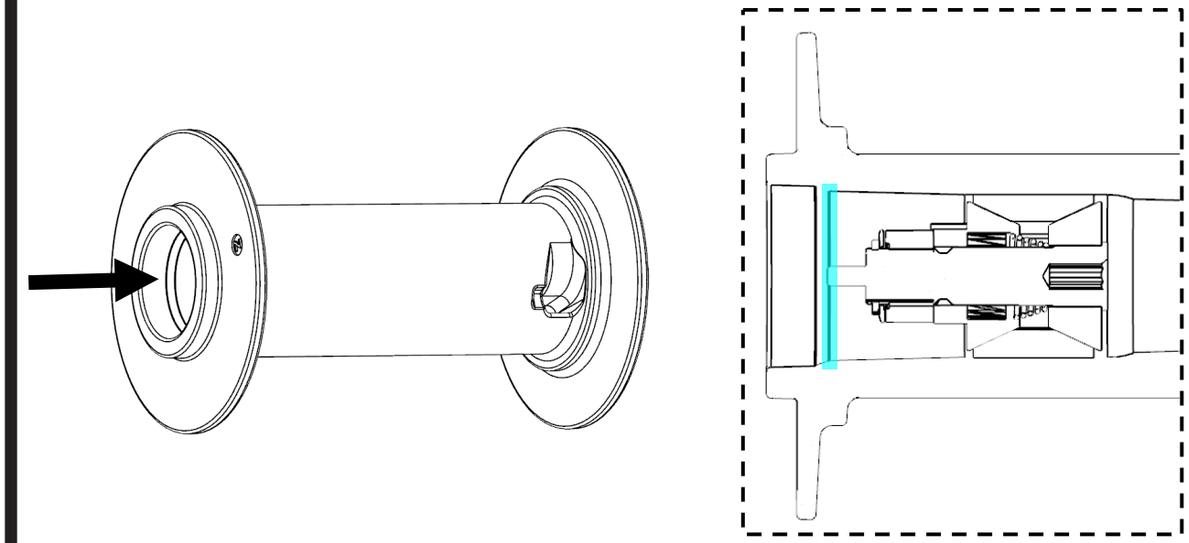

2.12 Geartrain Clocking

1. Remove Geartrain (Section 2.2 steps 1-3)

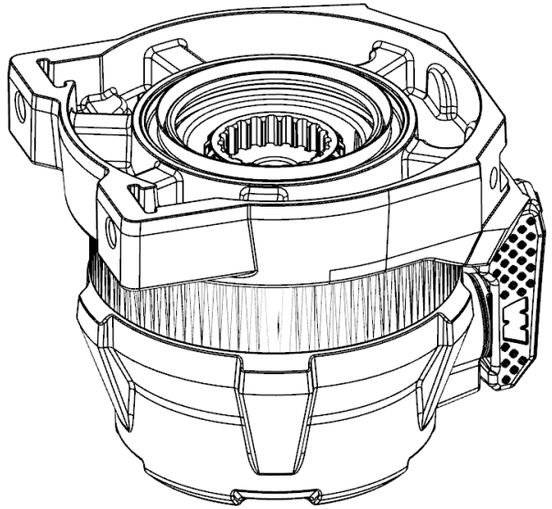

2. Remove geartrain bolts

Head: 4mm Hex
M5 x 0.8 x 60mm
Torque: 10.6-13Nm
(94-115inlb)

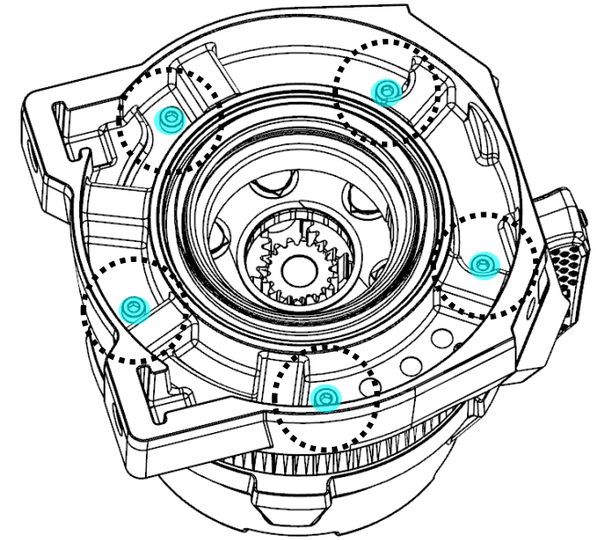

3. Turn until bolt holes line up in desired clocking position.

WARNING: DO NOT SEPARATE! THE O-RING SEAL MAY DISLODGE.

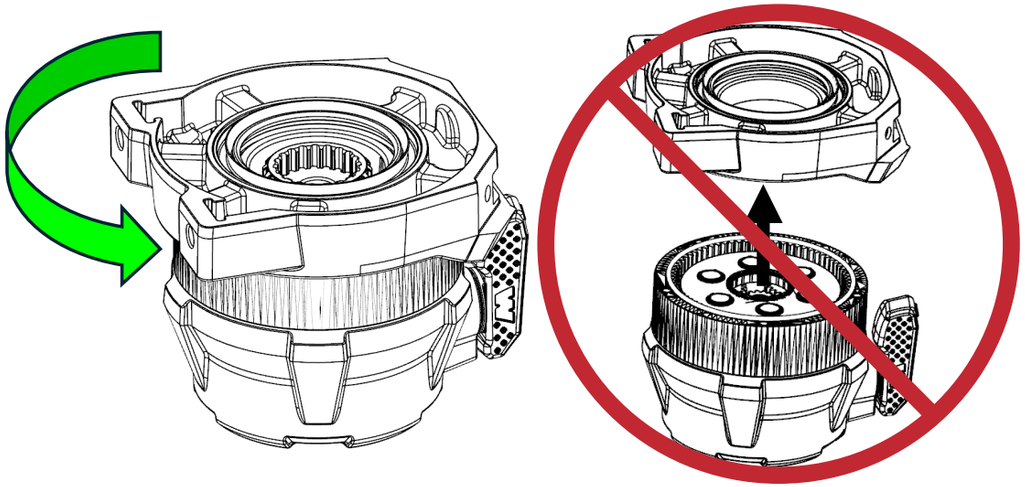

4. Install geartrain bolts

Head: 4mm Hex
M5 x 0.8 x 60mm
Torque: 10.6-13Nm
(94-115inlb)

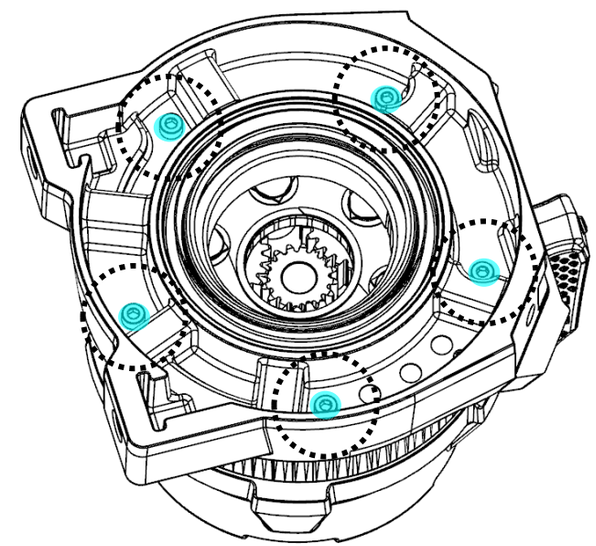

SECTION 3 – WINCH TROUBLE SHOOTING

GENERAL WINCH TROUBLESHOOTING

This section covers general troubleshooting.

NOTICE **You must use a 12VDC battery to perform any analysis on the ZEON XC . Using any other type of power supply could result in an incorrect diagnosis.**

PROBLEM	POSSIBLE CAUSE	CORRECTIVE ACTION
3.1 Power In / Out		
3.1.1		
Winch does not power IN or OUT	Clutch handle in freespool	Turn clutch handle to "Engaged"
	Ground cable is not directly attached to battery.	Attach ground cable to negative post of battery and/or clean battery post
	Control pack ground is not connected to the drum support	Connect or repair control pack ground wire as required
	Power or ground cables are damaged	Route cables away from hot or moving surfaces. Replace or repair power/ground cables as required
	Loose or corroded connection on battery or motor terminals.	Clean and tighten all connections
	Vehicle charging system cannot keep up with winch	Stop and allow the battery to recharge
	Worn motor brushes	Replace motor
	Internal contactor components sticking	Replace contactor
	Brake is binding	Replace brake and drum
	Excessive gear train wear, broken gear train components.	Disassemble gear train to investigate driveshaft, gear carriers, and ring gears. Replace if damaged or has excessive wear.
3.1.2		
Winch powers IN, but will not power OUT or powers out very slowly.	Brake is not disengaging	Replace brake and drum
	Load exceeds rating of winch and drum deformed	Refer to winch capacity on product label. DO NOT EXCEED LINE PULL RATING SHOWN ON PRODUCT LABEL.
	Internal contactor components sticking	Replace contactor
3.1.3		
Reduced Pull Capacity	Too many layers of rope.	Pull capacity is reduced by approximately 14% per layer. Use winch on first layer of drum for maximum power.
	Rope is interfering with tie rod or other part of winch.	Rewind rope on drum so that it is level and not rubbing on other parts of winch.
		Ensure fairlead opening is properly sized for drum length
	Motor is hot	Allow winch motor to cool for at least 10 minutes between short pulls. Increase cooling time for heavy loads or long pulls. See winch specification sheet.
	Electrical wires too long	Reduce distance between winch and battery.
	Rope diameter too large	Remove rope and replace with recommended rope dia. (3/8")
3.1.4		
Excess Pull Capacity	Excessive power supply capacity for winch	Use standard 12V OEM power system equipment (alternator, battery, etc.)
	Incorrectly sized power cables used	Any deviation from factory power cables will modify performance. Install Warn factory power cables.
3.2 Brake		
3.2.1		
Winch will not hold load.	Rope is spooled onto the drum in the wrong direction.	Remove all rope and reinstall in the proper direction.
	Load exceeds rating of winch	Refer to winch capacity on product label. DO NOT EXCEED LINE PULL RATING SHOWN ON PRODUCT LABEL.
	Brake is worn	Replace brake assembly and drum
	Brake or brake coupler are damaged	Replace brake assembly. Inspect brake couplers for damage or excess wear. Replace couplers if necessary.
	Power out distance is too long.	Allow winch to cool for at least 10 minutes between short pulls. Increase cooling time for heavy loads or long pulls.

3.3 Clutch		
3.3.1		
Winch will not shift to freespool or engaged	Rope is under tension.	Power out short distance to release line tension.
	Excessive Housing Wear	Inspect clutch handle, clutch pin, and end housing. If excessive wear on clutch features, replace end housing and clutch assembly
	Damaged Gear Train	Disassemble gear train to investigate binding in drive-shaft, gear carriers, and ring gears. Replace if damaged or has excessive wear.
3.3.2		
Winch is difficult to freespool.	Rope is stuck between lower layers on the drum	Shift winch to freespool, connect rope to an anchor point, and slowly back up vehicle to free stuck layers of rope
	Rope stacked to one side of drum	Avoid sharp angle pulls, make sure rope is wound level on drum
	Winch operation in cold environment.	Shift winch to freespool and then power in for about 30 seconds without drum moving to redistribute geartrain grease.
	Winch has not been broken in.	Tension rope per Winch Quick Start instructions
	Incorrect mounting bolt pattern	Inspect the mounting bolt pattern. If the winch is not mounted flat or the drum supports are not parallel, the geartrain may bind
	Bent drum flange.	Power the winch in and out while watching the drum flanges. A drum with bent flange must be replaced.
3.4 Noise		
3.4.1		
Winch makes rattle/ratchet noise on power in.	Brake is not broken in yet	Run winch normally. Brake pads will even out over time.
	Drum bushing not lubricated.	Grease drum bushings.

SECTION 4 - MAINTENANCE

4.1 General Winch Maintenance

- Keep winch free of dirt, oil, grease, water and other substances. Remove any overflow grease from bearings.
- Check all mounting bolts and make sure they are tightened to proper torque. Replace any damaged fasteners.
- Periodically check all hydraulic connections to be sure they are tight and free of corrosion.
- Check rope for visible damage every time winch is operated. Examples of damage are: cuts, knots, mashed or frayed portions, and broken strands. Replace rope immediately if damaged. Failure to replace a damaged rope could result in breakage.
- If winch drum continues to turn after controls are released, brake may need to be replaced.

Check	Before first Operation	After Each Use	Monthly	Semi-Annually	Yearly
Take time to fully read the Instructions and/or Operations Guide, and/or Basic Guide to Winching Techniques, in order to understand your winch and its operations	X				
Check fasteners and make sure they are tight and to proper torque.	X			X	X
Replace damaged fasteners	X	X	X	X	X
Check electrical connections.	X			X	X
Verify wiring to all components is correct and be certain that all connections are tight	X			X	X
Verify there is no exposed/bare wiring, terminals or cable insulation damage (chafing, cutting).	X			X	X
Repair or replace damaged electrical cable.	X	X	X	X	X
Visual Check of winch and electrical connections to ensure all components are free from corrosion:	X			X	X
Check Quick Connects and Contact Leads	X			X	X
Check Motor-Sub Assembly (Contactor, Motor/ Motor Terminals, OLI).	X			X	X
Ensure Remote Socket and Remote control connections are not damaged	X	X	X	X	X
Check hydraulic connections	X			X	X
Visual check of winch and control valve	X			X	X

4.2 Winch Rope Maintenance

Cleaning:

- Use low pressure water to clean synthetic rope. Do not use any chemicals.
- Do not direct high pressure water (pressure washers, car washes, etc.) directly between the drum support and drum flange or clutch lever.
- Use low pressure water and a soapy rag or sponge to clean the winch.
- Avoid using chemicals that may damage the finish.
- Thoroughly clean salt residue from the winch as soon as possible to minimize corrosion.

Rope Inspection:

⚠WARNING Always inspect winch rope, hook, and slings before operating winch. Frayed, kinked or damaged winch rope must be replaced immediately. Damaged components must be replaced before operation. Protect parts from damage.

When rope is first used, the outer filaments of the rope will quickly fuzz up. This is the result of these filaments breaking and this roughened surface will actually protect the fibers underneath. The condition should stabilize, not progress. If the surface roughness increases, excessive abrasion is taking place and strength is being lost.

Look closely at both the inner and outer fibers. When either is worn the rope is obviously weakened. Open the strands and look for powdered fiber—this is a sign of internal wear.

Localized discolorations could potentially represent chemical attack by anything from gear oil to battery acid. When doubt exists, replace the rope.

Maintenance:

- Inspect the winch rope and heat sleeve before and after each winching operation. Frayed or damaged rope must be replaced immediately. See rope care and storage.
- The rope must always spool onto the drum as indicated by the drum rotation decal on the winch.
- Use winch cover to protect winch and synthetic rope when not in use. Prolonged exposure to ultraviolet rays from sunlight can degrade synthetic rope strength over time.
- Avoid using synthetic rope over any rough surfaces without abrasion protection.
- Keep winch rope free of moisture, grease, dirt or other debris. If necessary, clean with a damp cloth.

Rope should be replaced when:

- Rope bulk anywhere along the length is reduced by 10% or more by abrasion.
- Two or more adjacent strands are cut.
- Flat areas or lumps are found that are not eliminated by flexing rope.
- Excessive fused or melted fibers are found. Any such areas will be stiff and the rope will have a glazed appearance.

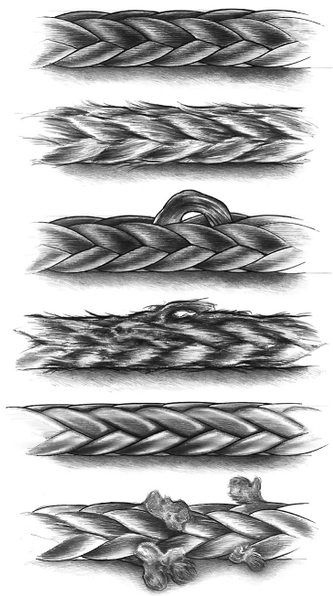

- Rope with original bulk.
- Rope displaying 25% strand volume reduction from abrasion—rope should be replaced.
- Rope strand showing full volume.
- Rope strand reduced by 25% abrasion—rope should be replaced.
- Rope exhibits fiber-set from compression. A slight sheen is visible. This is not a permanent characteristic and can be eliminated by flexing the rope.
- Rope displays two adjacent cut strands—rope should be replaced.

	Kit Contents	DESCRIPTION	ZEON XC 10 110410	ZEON XC 12 110412
			KIT PART NUMBER	
Service Kits	21, 27, 33	DRUM ASSEMBLY	110976	110976
	24	BRAKE ASSEMBLY	89916	89916
	19	GROUND CABLE 2GA	98399	98399
	12	POWER CABLE 2GA	109452	109452
	Not Shown	ROLLER FAIRLEAD	89214	89214
	48	HAWSE FAIRLEAD	N/A	N/A
	23, 28	DRIVESHAFT/COUPLER KIT	109662	109662
	25, 26	TIE PLATE	109675	109675
	40, 41	1ST STAGE PLANETARY SET	109774	109685
	38, 39	2ND STAGE PLANETARY SET	109696	109696
	35, 36, 37, 38	3RD STAGE PLANETARY SET	109699	109699
	29, 30	DRUM DRIVER SET	109705	109705
	8	12V LOW PROFILE CONTACTOR	111972	111972
	10	CONTROL PACK DUST BOOT	111973	111973
	18, 21, 22, 31, 32, 35, 38, 44, 47	GASKET BUSHING KIT	109709	109709
	25	TIE PLATE HARDWARE	109715	109715
	4, 25	MOTOR HARDWARE	109717	109717
	1, 2	MOTOR, 12V	111070	111070
	20, 4, 34, 21, 22, 31, 33, 25, 18, 35	DRUM SUPPORT KIT	111974	111974
	25, 32, 47	TRANSMISSION HARDWARE	109716	109716
	32, 35, 38, 42, 43, 45, 44, 46, 47	TRANSMISSION HOUSING	111975	111975
	3, 4, 5, 6, 7, 8, 9, 10, 11, 12, 13, 14, 15, 16, 17	CONTROL PACK ASSEMBLY	111976	111976
	5, 7, 9, 10, 11	CONTROL PACK COVER	111977	111977
	5, 6, 17	CONTROL PACK BASE	111978	111978
	11	BUS BAR COVER	111979	111979
	3, 4, 11	BUS BAR SEPARATOR	111980	111980
	Not Shown (all labels)	LABEL KIT	111981	111981
	Not Shown	WIRE ROPE ASSEMBLY	89213	89213
	Not shown	SYNTHETIC ROPE ASSEMBLY	N/A	N/A
	Not shown	REMOTE CONTROL	83665	83665
	Not shown	MOUNT/FAIRLEAD HARDWARE	111982	111982
	Not Shown	WIRE ROPE HARDWARE	98528	98528
	Not shown	SYNTHETIC ROPE HARDWARE	N/A	N/A
	Not shown	CONTROL PACK RELOCATION BRACKET	111992	111992
	Not shown	CONTROL PACK RELOCATION KIT - SHORT	111872	111872
	Not shown	CONTROL PACK RELOCATION KIT - LONG	111991	111991

			ZEON XC 10-S 110510	ZEON XC 12-S 110512	ZEON XC 14-S 110514
	Kit Contents	DESCRIPTION	KIT PART NUMBER		
Service Kits	21, 27, 33	DRUM ASSEMBLY	110976	110976	110976
	24	BRAKE ASSEMBLY	89916	89916	89916
	19	GROUND CABLE 2GA	98399	98399	98399
	12	POWER CABLE 2GA	109452	109452	109452
	Not Shown	ROLLER FAIRLEAD	N/A	N/A	N/A
	48	HAWSE FAIRLEAD	100655	100655	100655
	23, 28	DRIVESHAFT/COUPLER KIT	109662	109662	109662
	25, 26	TIE PLATE	109675	109675	109675
	40, 41	1ST STAGE PLANETARY SET	109774	109685	109695
	38, 39	2ND STAGE PLANETARY SET	109696	109696	109698
	35, 36, 37, 38	3RD STAGE PLANETARY SET	109699	109699	109699
	29, 30	DRUM DRIVER SET	109705	109705	109705
	8	12V LOW PROFILE CONTACTOR	111972	111972	111972
	10	CONTROL PACK DUST BOOT	111973	111973	111973
	18, 21, 22, 31, 32, 35, 38, 44, 47	GASKET BUSHING KIT	109709	109709	109709
	25	TIE PLATE HARDWARE	109715	109715	109715
	4, 25	MOTOR HARDWARE	109717	109717	109717
	1, 2	MOTOR, 12V	111070	111070	111070
	20, 4, 34, 21, 22, 31, 33, 25, 18, 35	DRUM SUPPORT KIT	111974	111974	111974
	25, 32, 47	TRANSMISSION HARDWARE	109716	109716	109716
	32, 35, 38, 42, 43, 45, 44, 46, 47	TRANSMISSION HOUSING	111975	111975	111975
	3, 4, 5, 6, 7, 8, 9, 10, 11, 12, 13, 14, 15, 16, 17	CONTROL PACK ASSEMBLY	111976	111976	111976
	5, 7, 9, 10, 11	CONTROL PACK COVER	111977	111977	111977
	5, 6, 17	CONTROL PACK BASE	111978	111978	111978
	11	BUS BAR COVER	111979	111979	111979
	3, 4, 11	BUS BAR SEPARATOR	111980	111980	111980
	Not Shown (all labels)	LABEL KIT	111981	111981	111981
	Not Shown	WIRE ROPE ASSEMBLY	N/A	N/A	N/A
	Not shown	SYNTHETIC ROPE ASSEMBLY	87915	93120	93120
	Not shown	REMOTE CONTROL	83665	83665	83665
	Not shown	MOUNT/FAIRLEAD HARDWARE	111982	111982	111982
	Not Shown	WIRE ROPE HARDWARE	N/A	N/A	N/A
	Not shown	SYNTHETIC ROPE HARDWARE	98526	98526	98526
	Not shown	CONTROL PACK RELOCATION BRACKET	111992	111992	111992
	Not shown	CONTROL PACK RELOCATION KIT - SHORT	111872	111872	111872
	Not shown	CONTROL PACK RELOCATION KIT - LONG	111991	111991	111991

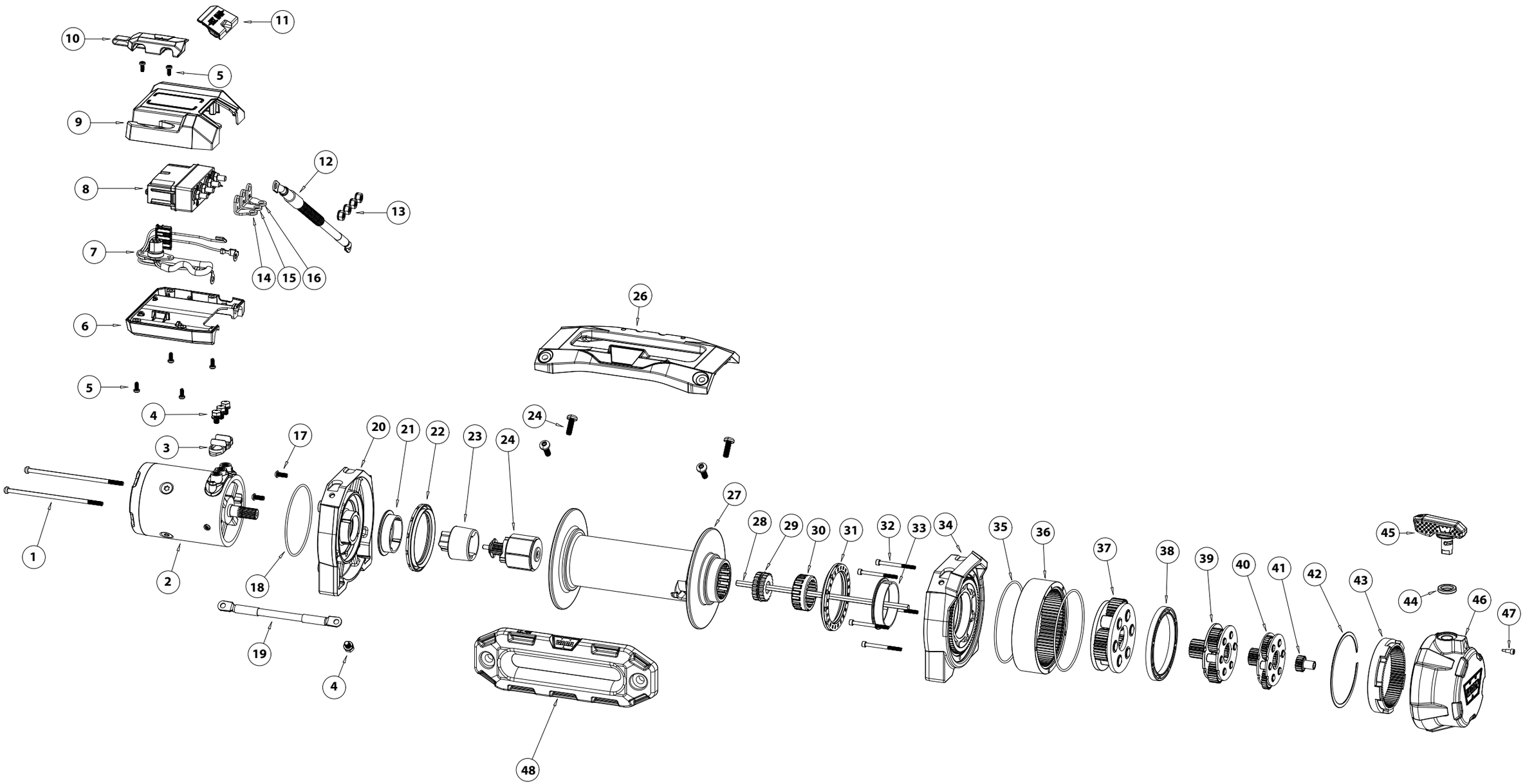
1
2
3
4
5
6
7
8
9
10
11
12
13
14
15
16
17
18
19
20
21
22
23
24
26
27
28
29
30
31
32
33
34
35
36
37
38
39
40
41
42
43
44
45
46
47
48